REF	DESCRIPTION	VALUE	V/W	TOL.	MFR'S DESIG	YAESU P/N	VERS.	LOT	SIDE	LAY ADR
C 1774	CHIP CAP.	10uF	25V	B	GRM188R61E106MA73D	K22144818		7-	B	b3
C 1774	CHIP CAP.	10uF	10V	B	GRM188B31A106ME69D	K22104810		13-	B	b3
C 1775	CHIP CAP.	5pF	50V	CH	GRM1882C1H5R0CA01D	K22174206		7-	A	D1
C 1776	CHIP CAP.	10pF	50V	CH	GRM1882C1H100JA01D	K22174211		8-	B	c2
C 1777	CHIP CAP.	10pF	50V	CH	GRM1882C1H100JA01D	K22174211		8-	B	c2
C 1778	CHIP TA.CAP.	0.1uF	35V		TMCSA1V104MTRF	K78160025		11-	B	b1
C 1779	CHIP CAP.	1uF	25V	B	GRM188B31E105KA75D	K22144815		11-	B	e5
C 1780	CHIP TA.CAP.	22uF	16V		TPSB226M016Y0600	K78120075		11-	B	e5
CD1001	CERAMIC DISC				JTBM450CX24-A	H7901530A		1-	B	d2
CF1001	CERAMIC FILTER				LTM450GW3.5-A	H3900612		1-	A	B3
CF1002	CERAMIC FILTER				LTM450FW3.5-A	H3900610		1-	A	B3
CF1003	CERAMIC FILTER				LTM450GW3.5-A	H3900612		1-	A	A2
D 1001	DIODE				EMZ6.8ET2R	G2071522		1-	B	a3
D 1002	SURGE ABSORBER				1608SGXA2-TR2	Q9000891		1-	A	E2
D 1003	DIODE				1SS372(TE85R.F)	G2070632		1-	B	a3
D 1004	DIODE				1SS355 TE-17	G2070470		1-	B	b3
D 1005	DIODE				BAS316	G2070716		1-	B	b3
D 1007	DIODE				RN142S TE61	G2070994		1-	A	E2
D 1008	DIODE				RN142S TE61	G2070994		1-	A	E2
D 1012	DIODE				1SS355 TE-17	G2070470		1-	A	C5
D 1013	DIODE				1SS355 TE-17	G2070470		1-	A	C5
D 1014	DIODE				1SS355 TE-17	G2070470		1-	B	b2
D 1015	DIODE				RN142S TE61	G2070994		1-	A	E1
D 1016	DIODE				RN142S TE61	G2070994		1-	A	E2
D 1017	DIODE				RN142S TE61	G2070994		1-	A	E3
D 1018	DIODE				RN142S TE61	G2070994		1-	A	E2
D 1019	DIODE				RN142S TE61	G2070994		1-	A	E2
D 1020	DIODE				RN142S TE61	G2070994		1-	A	E2
D 1021	DIODE				RN142S TE61	G2070994		1-	A	D2
D 1022	DIODE				RN142S TE61	G2070994		1-	A	D2
D 1023	DIODE				RN142S TE61	G2070994		1-	A	E1
D 1024	DIODE				RN142S TE61	G2070994		1-	A	D3
D 1025	DIODE				RN142S TE61	G2070994		1-	A	D2
D 1027	DIODE				RN142S TE61	G2070994		1-	A	D2
D 1028	DIODE				RN142S TE61	G2070994		1-	A	D2
D 1029	DIODE				RN142S TE61	G2070994		1-	A	D2
D 1030	DIODE				RN142S TE61	G2070994		1-	A	D1
D 1031	DIODE				RN142S TE61	G2070994		1-	A	D1
D 1032	DIODE				1SS355 TE-17	G2070470		1-	B	b1
D 1033	DIODE				HN1D04FU	G2071576		1-	A	C2
D 1033	DIODE				BAT15-099RE6327	G2071556		11-	A	C2
D 1034	DIODE				RB886Y G T2R	G2071464		1-	B	c2
D 1035	DIODE				1SS355 TE-17	G2070470		1-	B	c1
D 1036	DIODE				UDZS TE-17 8.2B	G2070890		1-	B	c1
D 1037	DIODE				1SS355 TE-17	G2070470		1-	A	D4
D 1038	DIODE				1SS355 TE-17	G2070470		1-	A	D4
D 1041	DIODE				1SS355 TE-17	G2070470		1-	B	e2
D 1042	DIODE				1SS355 TE-17	G2070470		1-	B	e2
D 1043	DIODE				RN731V TE-17	G2070898		1-	A	C2
D 1044	DIODE				RN731V TE-17	G2070898		1-	A	C2
D 1045	DIODE				RN731V TE-17	G2070898		1-	A	C2
D 1046	DIODE				1SS355 TE-17	G2070470		1-	B	c1
D 1047	DIODE				1SS355 TE-17	G2070470		1-	B	b1
D 1048	DIODE				UDZS TE-17 6.2B	G2070912		1-	B	b1
D 1049	DIODE				1SS355 TE-17	G2070470		1-	B	b1
D 1050	DIODE				1SS355 TE-17	G2070470		1-	B	b1
D 1052	DIODE				RB051L-40TE25	G2070718		1-	A	D3
D 1055	DIODE				1SS355 TE-17	G2070470		1-	B	b1
D 1056	DIODE				1SS355 TE-17	G2070470		1-	B	b1
D 1057	DIODE				1SS355 TE-17	G2070470		1-	B	d1
D 1058	DIODE				RN142S TE61	G2070994		1-	A	B1
D 1059	DIODE				1SS355 TE-17	G2070470		1-	A	E5
D 1060	DIODE				RN142S TE61	G2070994		1-	A	B1
D 1061	DIODE				1SS355 TE-17	G2070470		1-	B	e1
D 1063	DIODE				1SS355 TE-17	G2070470		1-	A	E5
D 1064	DIODE				1SS355 TE-17	G2070470		1-	A	E5
D 1065	DIODE				JDP2S04E(TAPE)	G2071180		1-	A	B2
D 1066	DIODE				DAN217U T106	G2071236		1-	B	d4
D 1067	DIODE				1SS355 TE-17	G2070470		1-	B	d1
D 1068	DIODE				1SS355 TE-17	G2070470		1-	B	d1
D 1069	DIODE				1SS355 TE-17	G2070470		1-	A	E4
D 1070	DIODE				D1F60-5053	G2071240		1-	A	E4
D 1071	DIODE				HN1D04FU	G2071576		1-	A	A3
D 1072	DIODE				1SS355 TE-17	G2070470		1-	A	E4
D 1073	DIODE				DA221M T2L	G2070940		1-	B	e2

REF	DESCRIPTION	VALUE	V/W	TOL.	MFR'S DESIG	YAESU P/N	VERS.	LOT	SIDE	LAY ADR
D 1074	DIODE				1SS355 TE-17	G2070470		1-	B	e3
D 1075	DIODE				1SS355 TE-17	G2070470		1-	B	a2
D 1076	DIODE				1SS355 TE-17	G2070470		1-	B	a1
D 1077	DIODE				1SS355 TE-17	G2070470		1-	B	a2
D 1078	DIODE				1SS355 TE-17	G2070470		1-	B	a2
D 1079	DIODE				1SS355 TE-17	G2070470		1-	B	a2
D 1080	DIODE				1SS355 TE-17	G2070470		1-6		
D 1081	DIODE				1SS355 TE-17	G2070470		1-	B	a2
D 1082	DIODE				BZB84-B27	G2071568		1-	A	A5
D 1083	DIODE				1SS355 TE-17	G2070470		1-	B	b2
D 1084	DIODE				1SS355 TE-17	G2070470		1-	B	a2
D 1085	DIODE				1SS355 TE-17	G2070470		1-	B	a2
D 1086	DIODE				1SS355 TE-17	G2070470		1-	B	b1
D 1087	DIODE				RN142S TE61	G2070994		1-	A	E2
D 1088	DIODE				UDZS TE-17 20B	G2071016		7-	A	D3
D 1089	DIODE				UDZS TE-17 20B	G2071016		7-	A	D3
D 1090	DIODE				1SS355 TE-17	G2070470		7-	A	F5
D 1091	DIODE				1SS355 TE-17	G2070470		7-	A	D3
D 1092	DIODE				1SS355 TE-17	G2070470		7-	B	b3
D 1093	DIODE				1SS355 TE-17	G2070470		7-	B	b3
D 1094	DIODE				DAN235E TL	G2070612		7-	A	B4
D 1095	DIODE				1SS355 TE-17	G2070470		11-	B	b1
F 1001	CHIP FUSE	3.15A			FHC16 322ADTP	Q0000118		1-	A	E4
F 1002	CHIP FUSE	1.25A			FCC16 132ABTP	Q0000109		1-	A	A5
FB1001	FERRITE BEADS				BLM18AG601SN1D	L9190111		1-	B	a3
FB1002	FERRITE BEADS				BLM18AG601SN1D	L9190111		1-	B	a3
FB1003	FERRITE BEADS				BLM18BD182SN1D	L1690602		1-	B	a3
FB1004	FERRITE BEADS				BLM15AG121SN1D	L1690843		1-10		
FB1005	FERRITE BEADS				BLM18BD182SN1D	L1690602		1-	B	c1
FB1006	FERRITE BEADS				BLM18BD182SN1D	L1690602		1-	B	b1
FB1007	FERRITE BEADS				BK2125HS101-T	L9190087		1-10		
FB1008	FERRITE BEADS				BK2125HS101-T	L9190087		1-10		
FB1009	FERRITE BEADS				BK2125HS101-T	L9190087		1-10		
FB1010	FERRITE BEADS				BLM18BD182SN1D	L1690602		1-	A	E4
FB1011	FERRITE BEADS				BLM18AG601SN1D	L9190111		1-	A	E4
FB1012	FERRITE BEADS				BLM18AG601SN1D	L9190111		1-	A	E4
FB1013	FERRITE BEADS				BLM18BD182SN1D	L1690602		1-	A	C1
FB1014	FERRITE BEADS				BLM18BD182SN1D	L1690602		1-	A	C1
FB1015	FERRITE BEADS				BLM18BD182SN1D	L1690602		1-	A	C1
FB1016	FERRITE BEADS				BLM18BD182SN1D	L1690602		1-	A	C1
FB1017	FERRITE BEADS				BLM18BD182SN1D	L1690602		1-	A	C1
FB1018	FERRITE BEADS				BLM18BD182SN1D	L1690602		1-	A	E4
FB1019	FERRITE BEADS				BLM18BD182SN1D	L1690602		1-	A	F3
FB1020	FERRITE BEADS				BLM18BD182SN1D	L1690602		1-	A	E3
FB1021	FERRITE BEADS				BLM18BD182SN1D	L1690602		1-	A	E4
FB1022	FERRITE BEADS				BLM18BD182SN1D	L1690602		1-	A	C1
FB1023	FERRITE BEADS				BLM18BD182SN1D	L1690602		1-	A	C1
FB1024	FERRITE BEADS				BLM18BD182SN1D	L1690602		1-	A	C1
FB1025	FERRITE BEADS				BLM18BD182SN1D	L1690602		1-	A	C1
FB1026	FERRITE BEADS				BLM18BD182SN1D	L1690602		1-	A	C1
FB1027	FERRITE BEADS				BLM18BD182SN1D	L1690602		1-	A	C1
FB1028	FERRITE BEADS				BLM18BD182SN1D	L1690602		1-	A	C1
FB1029	FERRITE BEADS				BLM18BD182SN1D	L1690602		1-	A	C1
FB1030	FERRITE BEADS				BLM18BD182SN1D	L1690602		1-	A	C1
FB1031	FERRITE BEADS				BLM18PG221SN1D	L9190181		1-	A	C1
FB1032	FERRITE BEADS				BLM18BD182SN1D	L1690602		1-	A	C1
FB1033	FERRITE BEADS				BLM18PG221SN1D	L9190181		1-	A	C1
FB1034	FERRITE BEADS				BLM18AG601SN1D	L9190111		1-	A	B1
FB1035	FERRITE BEADS				BLM18PG221SN1D	L9190181		1-	B	a1
FB1035	FERRITE BEADS				BLM18KG260TN1D	L9190216		11-	B	a1
FB1036	FERRITE BEADS				BLM18PG221SN1D	L9190181		1-	B	a2
FB1036	FERRITE BEADS				BLM18KG260TN1D	L9190216		11-	B	a2
FB1037	FERRITE BEADS				BLM18BD182SN1D	L1690602		1-	A	B1
FB1038	FERRITE BEADS				BLM18PG221SN1D	L9190181		1-	A	B1
FB1039	FERRITE BEADS				BLM18BD182SN1D	L1690602		1-	A	B1
FB1040	FERRITE BEADS				BLM18PG221SN1D	L9190181		1-	A	B1
FB1041	FERRITE BEADS				BLM18BD182SN1D	L1690602		1-	A	B1
FB1042	FERRITE BEADS				BLM18BD182SN1D	L1690602		1-	A	B1
FB1043	FERRITE BEADS				BLM18BD182SN1D	L1690602		1-	B	a2
FB1044	FERRITE BEADS				BLM18BD182SN1D	L1690602		1-	B	a2
FB1045	FERRITE BEADS				BLM18BD182SN1D	L1690602		1-	B	a2
FB1046	FERRITE BEADS				BLM18BD182SN1D	L1690602		1-	B	a2
FB1047	FERRITE BEADS				BLM18BD182SN1D	L1690602		1-	B	a2
FB1048	FERRITE BEADS				BLM18BD601SN1D	L9190143		1-	A	A5
FB1049	FERRITE BEADS				BLM18BD601SN1D	L9190143		1-	A	A5

REF	DESCRIPTION	VALUE	V/W	TOL.	MFR'S DESIG	YAESU P/N	VERS.	LOT	SIDE	LAY ADR
FB1050	FERRITE BEADS				BLM18AG601SN1D	L9190111		1-	A	A5
FB1051	FERRITE BEADS				BLM18PG221SN1D	L9190181		1-	A	A5
FB1052	FERRITE BEADS				BLM18BD182SN1D	L1690602		1-	A	A5
FB1053	FERRITE BEADS				BLM18PG221SN1D	L9190181		1-	A	A4
FB1053	FERRITE BEADS				BLM18KG260TN1D	L9190216		11-	A	A4
J 1001	CONNECTOR				U.FL-R-SMT(10)	P1091155		1-	A	E3
J 1002	CONNECTOR				U.FL-R-SMT(10)	P1091155		1-	A	C1
J 1003	CONNECTOR				SUB-110HB-B2N	P0091610		1-	A	F3
J 1004	CONNECTOR				12FHJ-SM1-TB(LF)(SN)	P1091574		1-	A	B5
J 1007	CONNECTOR				LNB0508BC-8-05A	P1091596		1-	A	F4
J 1008	CONNECTOR				30FLT-SM2-TB(LF)(SN)(M)	P1091142		1-	A	C1
J 1009	CONNECTOR				LNB0508BC-6-05A	P1091598		1-	A	F4
J 1010	TERMINAL				TH-1.6-6.0-M2	S5000410		1-	A	C4
J 1011	TERMINAL				TH-1.6-6.0-M2	S5000410		1-	A	C5
J 1012	TERMINAL				TH-1.6-6.0-M2	S5000410		1-	A	A4
J 1013	TERMINAL				TH-1.6-6.0-M2	S5000410		1-	A	A5
J 1014	CONNECTOR				AXK6S30647YG	P0091612		1-	A	B5
J 1015	CONNECTOR				MJV0808KX06	P1091355		1-	A	A1
J 1016	CONNECTOR				TSH-3563-12-PBT-T	P1091559		1-	A	F2
J 1017	CONNECTOR				YKB21-5295V	P1091443		1-	A	F2
J 1018	CONNECTOR				MJV0606KX06-H	P1091386		1-	A	A5
J 1019	CONNECTOR				SC25-02WS	P0090621		1-	A	E2
J 1020	CONNECTOR				YKB21-5296N	P1091233		1-	A	F2
J 1021	CONNECTOR				U.FL-R-SMT(10)	P1091155		1-	B	e3
J 1022	CONNECTOR				U.FL-R-SMT(10)	P1091155		1-	B	d1
JP1004	CHIP RES.	0	1/16W	5%	RMC1/16 000JATP	J24185000		4-	A	C5
JP1005	CHIP RES.	0	1/16W	5%	RMC1/16 000JATP	J24185000		4-	A	C5
L 1001	M.RFC	1000uH			LLM3225-102J	L1691157		1-	A	E3
L 1004	CHIP COIL	0.15uH		2%	C2520C-R15G-RA	L1691296		1-	A	C1
L 1005	CHIP COIL	0.15uH		2%	C2520C-R15G-RA	L1691296		1-	A	C1
L 1006	CHIP COIL	47uH			LQH32MN470K23L	L1690095		1-	A	D1
L 1007	CHIP COIL	10uH		5%	NLV25T-100J-PF	L1691436		1-	A	D1
L 1008	CHIP COIL	0.18uH		2%	C2520C-R18G-RA	L1691297		1-	A	E2
L 1009	CHIP COIL	0.22uH		2%	C2520C-R22G-RA	L1691298		1-	A	E2
L 1010	CHIP COIL	0.18uH		2%	C2520C-R18G-RA	L1691297		1-	A	E2
L 1011	M.RFC	1000uH			LLM3225-102J	L1691157		1-	A	E2
L 1012	M.RFC	3.9uH			LLM3225-3R9J	L1691128		1-	A	E2
L 1013	M.RFC	3.3uH			LLM3225-3R3J	L1691127		1-	A	E2
L 1014	CHIP COIL	100uH		5%	NLV25T-101J-PF	L1691779		1-	B	b2
L 1015	M.RFC	3.3uH			LLM3225-3R3J	L1691127		1-	A	E2
L 1016	M.RFC	6.8uH			LLM3225-6R8J	L1691131		1-	A	E2
L 1017	M.RFC	8.2uH			LLM3225-8R2J	L1691132		1-	A	E2
L 1018	M.RFC	6.8uH			LLM3225-6R8J	L1691131		1-	A	E1
L 1019	M.RFC	3.9uH			LLM3225-3R9J	L1691128		1-	A	E2
L 1020	CHIP COIL	100uH		5%	NLV25T-101J-PF	L1691779		1-	A	E3
L 1021	M.RFC	10uH			LLM3225-100J	L1691133		1-	A	E3
L 1022	CHIP COIL	100uH		5%	NLV25T-101J-PF	L1691779		1-	A	E1
L 1023	CHIP COIL	0.82uH		2%	C2520C-R82G-RA	L1691307		1-	A	D2
L 1024	CHIP COIL	0.22uH		2%	C2520C-R22G-RA	L1691298		4-6	A	E2
L 1025	CHIP COIL	0.33uH		2%	C2520C-R33G-RA	L1691300		1-	A	D2
L 1026	CHIP COIL	0.082uH		2%	C2520C-82NG-RA	L1691293		1-	A	D2
L 1028	CHIP COIL	100uH		5%	NLV25T-101J-PF	L1691779		1-	B	c2
L 1029	CHIP COIL	100uH		5%	NLV25T-101J-PF	L1691779		1-	A	D1
L 1030	M.RFC	1.2uH			LLM3225-1R2J	L1691122		1-	A	D3
L 1031	M.RFC	3.3uH			LLM3225-3R3J	L1691127		1-	A	D3
L 1032	M.RFC	1.2uH			LLM3225-1R2J	L1691122		1-	A	D3
L 1033	CHIP COIL	1uH		2%	C2520C-1R0G-RA	L1691309		1-	A	D2
L 1034	CHIP COIL	1uH		2%	C2520C-1R0G-RA	L1691309		1-	A	D2
L 1035	CHIP COIL	0.27uH		2%	C2520C-R27G-RA	L1691299		1-	A	D2
L 1036	CHIP COIL	1uH		2%	C2520C-1R0G-RA	L1691309		1-	A	D2
L 1037	CHIP COIL	1uH		2%	C2520C-1R0G-RA	L1691309		1-	A	D2
L 1038	CHIP COIL	0.47uH		2%	C2520C-R47G-RA	L1691302		1-	A	D2
L 1039	CHIP COIL	0.1uH		2%	C2520C-R10G-RA	L1691294		1-	A	D2
L 1040	CHIP COIL	0.039uH		2%	C2520C-39NG-RA	L1691289		1-	A	D2
L 1041	CHIP COIL	0.47uH		2%	C2520C-R47G-RA	L1691302		1-	A	D2
L 1042	CHIP COIL	100uH		5%	NLV25T-101J-PF	L1691779		1-	B	b1
L 1043	M.RFC	10uH			LLM3225-100J	L1691133		1-	A	D3
L 1045	CHIP COIL	100uH		5%	NLV25T-101J-PF	L1691779		1-	B	c2
L 1046	CHIP COIL	0.82uH		2%	C2520C-R82G-RA	L1691307		1-	A	D2
L 1047	CHIP COIL	0.33uH		2%	C2520C-R33G-RA	L1691300		1-	A	D2
L 1048	CHIP COIL	0.082uH		2%	C2520C-82NG-RA	L1691293		1-	A	D2
L 1049	CHIP COIL	100uH		5%	NLV25T-101J-PF	L1691779		1-	B	c1
L 1050	CHIP COIL	0.47uH		2%	C2520C-R47G-RA	L1691302		1-	B	c2
L 1050	CHIP COIL	0.22uH		2%	C2520C-R22G-RA	L1691298		7-	B	c2
L 1051	M.RFC	0.1uH		2%	0805CS-101XGLC	L1691634		1-	A	C1

REF	DESCRIPTION	VALUE	V/W	TOL.	MFR'S DESIG	YAESU P/N	VERS.	LOT	SIDE	LAY ADR
L 1052	CHIP COIL	100uH		5%	NLV25T-101J-PF	L1691779		1-	A	E1
L 1053	M.RFC	0.068uH		2%	0805CS-680XGLC	L1691632		1-	A	C2
L 1057	M.RFC	0.082uH		2%	0805CS-820XGLC	L1691633		1-	B	c2
L 1058	M.RFC	0.068uH		2%	0805CS-680XGLC	L1691632		1-	A	C2
L 1059	M.RFC	0.68uH			LK1608 R68K-T	L1690416		1-	A	C2
L 1060	M.RFC	1uH			LK1608 1R0K-T	L1690687		1-	A	C2
L 1061	M.RFC	0.12uH		2%	0805CS-121XGLC	L1691635		1-	A	C2
L 1062	M.RFC	0.12uH		2%	0805CS-121XGLC	L1691635		1-	A	C2
L 1063	M.RFC	4.7uH		5%	0805LS-472XJLC	L1691464		1-	A	C2
L 1064	CHIP COIL	2.2uH			CDRH5D28RHPNP-2R2NC	L1691819		1-10		
L 1065	M.RFC	0.12uH		2%	0805CS-121XGLC	L1691635		1-	A	C1
L 1066	M.RFC	0.12uH		2%	0805CS-121XGLC	L1691635		1-	A	C1
L 1067	CHIP COIL	0.27uH		2%	C2520C-R27G-RA	L1691299		1-	A	C2
L 1068	CHIP COIL	0.56uH		2%	C2520C-R56G-RA	L1691303		1-	A	C2
L 1069	M.RFC	0.22uH		2%	C2012C-R22G-RA	L1690780		1-	B	d3
L 1070	CHIP COIL	0.27uH		2%	C2520C-R27G-RA	L1691299		1-	A	B1
L 1071	CHIP COIL	0.56uH		2%	C2520C-R56G-RA	L1691303		1-	A	B2
L 1072	M.RFC	2.2uH			LK1608 2R2K-T	L1690634		1-	B	e1
L 1073	M.RFC	2.2uH			LK1608 2R2K-T	L1690634		1-	B	d1
L 1074	M.RFC	1uH			LK1608 1R0K-T	L1690687		1-	B	d2
L 1075	M.RFC	330uH			LLM3225-331J	L1691151		1-	B	e3
L 1076	M.RFC	0.27uH		2%	0805CS-271XGLC	L1691639		1-	B	e2
L 1077	M.RFC	0.12uH		2%	C2012C-R12G-RA	L1690777		1-	B	e1
L 1078	CHIP COIL	100uH			LQH31MN101J03L	L1691013		1-6		
L 1079	M.RFC	56uH			LLM3225-560J	L1691142		1-	B	d3
L 1080	M.RFC	1uH			LK1608 1R0K-T	L1690687		1-	B	d3
L 1081	M.RFC	1uH			LK1608 1R0K-T	L1690687		1-	B	d3
L 1082	M.RFC	68uH			LLM3225-680J	L1691143		1-	B	d3
L 1083	M.RFC	56uH			LLM3225-560J	L1691142		1-	B	d3
L 1085	CHIP COIL	100uH		5%	NLV25T-101J-PF	L1691779		1-	B	b2
L 1087	CHIP COIL	100uH		5%	NLV25T-101J-PF	L1691779		1-	A	D1
L 1088	CHIP COIL	100uH			LQH31MN101J03L	L1691013		1-	B	e3
Q 1001	IC				NJM2902V-TE1	G1091679		1-	B	c1
Q 1002	TRANSISTOR				2SC4081 T106 R	G3340818R		1-	B	a2
Q 1003	TRANSISTOR				2SA1576A T106 R	G3115768R		1-	A	E3
Q 1004	FET				RTM002P02(TAPE)	G3070347		1-6		
Q 1005	TRANSISTOR				DTC114EUA T106	G3070084		1-	A	E3
Q 1006	TRANSISTOR				2SC4081 T106 R	G3340818R		1-10		
Q 1007	IC				SN74LVC2G08DCTR	G1094341		1-	A	B5
Q 1008	TRANSISTOR				2SC4081 T106 R	G3340818R		1-	B	a2
Q 1009	FET				BF2040W	G4070022		1-	A	D1
Q 1010	IC				NJM2902V-TE1	G1091679		1-	B	b1
Q 1011	IC				UPC2709TB-E3	G1095238		1-	A	D1
Q 1012	TRANSISTOR				2SB1182-TLQ	G3070063		1-	A	E3
Q 1013	TRANSISTOR				DTC114EUA T106	G3070084		1-	A	E3
Q 1014	TRANSISTOR				2SA1576A T106 R	G3115768R		1-6	B	a3
Q 1014	TRANSISTOR				UMH11N TN	G3070212		11-	B	a3
Q 1015	IC				CP2105-F01-GMR	G1094981		1-	B	a3
Q 1016	TRANSISTOR				DTC143ZE TL	G3070102		1-	B	b1
Q 1018	TRANSISTOR				2SB1182-TLQ	G3070063		1-	A	E3
Q 1019	TRANSISTOR				DTC114EUA T106	G3070084		1-	A	E3
Q 1020	TRANSISTOR				2SA1576A T106 R	G3115768R		1-6	B	a3
Q 1020	TRANSISTOR				UMH11N TN	G3070212		11-	B	a3
Q 1021	IC				CD4052BPWR	G1093862		1-	B	a3
Q 1022	IC				R5F61653RN50FPV	G1095228		1-	A	C4
Q 1023	TRANSISTOR				UMD3N TR	G3070211		1-	B	b2
Q 1024	TRANSISTOR				2SB624-T2B BV3	G3206247C		1-	B	b2
Q 1025	TRANSISTOR				DTC144EUA T106	G3070041		1-	B	b2
Q 1026	TRANSISTOR				DTC114EUA T106	G3070084		1-	B	c3
Q 1027	TRANSISTOR				DTC114EUA T106	G3070084		1-	B	d4
Q 1028	TRANSISTOR				UMX2N TR	G3070254		1-	A	B5
Q 1029	TRANSISTOR				2SC3356-T2B R24	G3333567D		1-	A	D1
Q 1030	TRANSISTOR				DTC114EUA T106	G3070084		1-	B	c3
Q 1031	TRANSISTOR				DTC114EUA T106	G3070084		1-	B	c3
Q 1032	TRANSISTOR				DTC114EUA T106	G3070084		1-	B	c3
Q 1033	TRANSISTOR				DTC114EUA T106	G3070084		1-	B	d4
Q 1034	IC				SN74HCT04PWR	G1094484		1-	A	B5
Q 1035	TRANSISTOR				DTC114EUA T106	G3070084		1-	B	c3
Q 1036	TRANSISTOR				DTC114EUA T106	G3070084		1-	B	d4
Q 1037	IC				CD74HC238PWR	G1094275		1-	B	c5
Q 1038	TRANSISTOR				UMD3N TR	G3070211		1-	B	b1
Q 1039	TRANSISTOR				UMD3N TR	G3070211		1-	B	b1
Q 1040	IC				CD74HC238PWR	G1094275		1-	B	c5
Q 1041	IC				MB85RS256APNF-G-JNERE1	G1094985		1-	B	d5
Q 1042	IC				PE4259-63/TR	G1095102		1-	A	C2

REF	DESCRIPTION	VALUE	V/W	TOL.	MFR'S DESIG	YAESU P/N	VERS.	LOT	SIDE	LAY ADR
Q 1043	IC				TC7SH08FU(TE85L.JF)	G1094736		1-10		
Q 1044	IC				BA05FP-BZE2	G1093209		1-	A	B4
Q 1045	TRANSISTOR				2SC4081 T106	G3340818		1-10		
Q 1046	IC				CD74HC238PWR	G1094275		1-	B	c5
Q 1047	IC				SMA5101-TL-H	G1095075		1-	A	A2
Q 1048	TRANSISTOR				2SC4081 T106 R	G3340818R		1-	B	c1
Q 1049	IC				TPS650061RUKR	G1095070		1-10		
Q 1050	TRANSISTOR				2SC4081 T106	G3340818		1-10		
Q 1051	TRANSISTOR				2SA1576A T106 R	G3115768R		1-	A	D4
Q 1052	TRANSISTOR				2SA1576A T106 R	G3115768R		1-	A	D4
Q 1053	TRANSISTOR				2SC4081 T106 R	G3340818R		1-	A	D4
Q 1054	TRANSISTOR				2SC4081 T106 R	G3340818R		1-	A	D4
Q 1055	IC				UPC2709TB-E3	G1095238		1-	A	C2
Q 1056	TRANSISTOR				2SC4081 T106 R	G3340818R		1-	B	c1
Q 1057	TRANSISTOR				DTC144EUA T106	G3070041		1-	B	c1
Q 1058	IC				TPS3805H33DCKR	G1095072		1-10		
Q 1059	IC				BA033CC0FP-BZE2	G1094077		1-	A	C5
Q 1060	IC				PST8245UR	G1095216		1-	A	D3
Q 1064	IC				PE4259-63/TR	G1095102		1-	A	C2
Q 1065	TRANSISTOR				2SC4081 T106 R	G3340818R		1-	B	c2
Q 1066	IC				TC4W53FU(TE12L_F)	G1091675		1-	B	b1
Q 1067	TRANSISTOR				DTC144EUA T106	G3070041		1-	B	c1
Q 1068	IC				LM2904PWR	G1094010		1-	B	c2
Q 1069	IC				PE4259-63/TR	G1095102		1-	A	C2
Q 1070	TRANSISTOR				2SC4215Y(TE85R.F)	G3342157Y		1-	B	d3
Q 1071	IC				HD74LV2G74A(TAPE)	G1093788		1-	B	c4
Q 1072	IC				BA033CC0FP-BZE2	G1094077		1-	A	D3
Q 1073	IC				PE4259-63/TR	G1095102		1-	A	B2
Q 1074	IC				TC7SH86FU,LJ(CT	G1094078		1-	B	d4
Q 1075	IC				TA75S01F(TE85R.F)	G1091593		1-	A	D4
Q 1076	IC				BU2505FV-E2	G1093714		1-	B	c3
Q 1077	IC				SN74HCT04PWR	G1094484		1-	B	c4
Q 1078	TRANSISTOR				DTA114EUA T106	G3070083		1-	B	e1
Q 1079	FET				BF2040W	G4070022		1-	A	B2
Q 1080	TRANSISTOR				2SA1576A T106 R	G3115768R		1-	B	e1
Q 1081	IC				TA75S01F(TE85R.F)	G1091593		1-	B	d3
Q 1082	IC				BU2152FS(TAPE)	G1093942		1-	B	c3
Q 1083	IC				BA05FP-BZE2	G1093209		1-	A	D4
Q 1084	TRANSISTOR				2SC4081 T106 R	G3340818R		1-	B	e1
Q 1085	TRANSISTOR				2SC4081 T106 R	G3340818R		1-	B	e2
Q 1086	IC				TC4W53FU(TE12L_F)	G1091675		1-	B	b1
Q 1087	TRANSISTOR				2SC4215Y(TE85R.F)	G3342157Y		1-	B	d2
Q 1088	TRANSISTOR				2SC4081 T106 R	G3340818R		1-	B	c4
Q 1089	IC				PE4259-63/TR	G1095102		1-	A	B2
Q 1090	IC				NJM2594V-TE1	G1093750		1-	B	e3
Q 1091	TRANSISTOR				2SC4215Y(TE85R.F)	G3342157Y		1-	B	d2
Q 1092	IC				NJM2172V-TE1	G1095083		1-	A	D5
Q 1093	IC				CD74HCT4053PWR	G1094273		1-	B	c4
Q 1094	IC				NJM2591V-TE1	G1094024		1-	B	d2
Q 1096	IC				TC4W53FU(TE12L_F)	G1091675		1-	B	d4
Q 1097	IC				LM2904PWR	G1094010		1-	B	c4
Q 1098	IC				CD74HCT4053PWR	G1094273		1-	A	E5
Q 1099	IC				TC4W53FU(TE12L_F)	G1091675		1-	B	c4
Q 1100	FET				3SK294(TE85L)	G4802948A		1-	A	C1
Q 1101	FET				3SK294(TE85L)	G4802948A		1-	A	C1
Q 1102	FET				3SK294(TE85L)	G4802948A		1-	A	C1
Q 1103	IC				LM2902PWR	G1094009		1-	B	d1
Q 1104	FET				3SK294(TE85L)	G4802948A		1-	A	C2
Q 1105	IC				AD9834BRUZ-REEL7	G1094297		1-	B	d3
Q 1106	TRANSISTOR				2SC4215Y(TE85R.F)	G3342157Y		1-	B	e1
Q 1107	TRANSISTOR				2SA1576A T106 R	G3115768R		1-	B	e1
Q 1108	TRANSISTOR				2SC4081 T106 R	G3340818R		1-	B	d4
Q 1109	IC				BU2502FS-E2	G1094524		1-	A	E4
Q 1110	IC				TC4W53FU(TE12L_F)	G1091675		1-	A	E5
Q 1111	IC				LM2902PWR	G1094009		1-	A	D5
Q 1112	IC				CD74HCT4053PWR	G1094273		1-	B	a4
Q 1113	IC				TA75S01F(TE85R.F)	G1091593		1-	B	d1
Q 1114	TRANSISTOR				2SD2211 T100 QR	G3422117Q		1-	A	E4
Q 1115	TRANSISTOR				2SC4215Y(TE85R.F)	G3342157Y		1-	B	e3
Q 1116	TRANSISTOR				2SC4215Y(TE85R.F)	G3342157Y		1-	B	d3
Q 1117	TRANSISTOR				DTC114EUA T106	G3070084		1-	B	d3
Q 1118	TRANSISTOR				DTC114EUA T106	G3070084		1-	B	d3
Q 1119	TRANSISTOR				2SC4081 T106 R	G3340818R		1-	B	e2
Q 1120	IC				LA4425A-E	G1092241		1-	A	E1
Q 1121	TRANSISTOR				2SD1628-TD-E	G3416288		1-	A	E1

REF	DESCRIPTION	VALUE	V/W	TOL.	MFR'S DESIG	YAESU P/N	VERS.	LOT	SIDE	LAY ADR
Q 1122	TRANSISTOR				2SC4116GR(TE85L.F)	G3341168G		1-	A	B1
Q 1123	IC				NJM2594V-TE1	G1093750		1-	B	e3
Q 1124	TRANSISTOR				2SA1576A T106 R	G3115768R		1-	B	a1
Q 1125	IC				LM2902PWR	G1094009		1-	A	E5
Q 1126	TRANSISTOR				2SC4081 T106 R	G3340818R		1-	B	a2
Q 1128	IC				BA05FP-BZE2	G1093209		1-	B	e1
Q 1130	TRANSISTOR				DTC114EUA T106	G3070084		1-	B	a2
Q 1131	TRANSISTOR				2SC4081 T106 R	G3340818R		1-	B	a2
Q 1133	TRANSISTOR				DTC114EUA T106	G3070084		1-	B	a1
Q 1143	IC				LM2904PWR	G1094010		1-	A	E4
Q 1149	IC				CD4066BPWR	G1093865		1-	B	c3
Q 1160	IC				NJM2737V(TAPE)	G1094292		1-	B	e4
Q 1160	IC				NJM2732V-TE1	G1095466		13-	B	e4
Q 1161	IC				NJM2737V(TAPE)	G1094292		1-	B	e4
Q 1161	IC				NJM2732V-TE1	G1095466		13-	B	e4
Q 1162	IC				NJM2902V-TE1	G1091679		1-	B	d4
Q 1163	IC				LM2904PWR	G1094010		1-	A	B1
Q 1200	IC				NJM2902V-TE1	G1091679		1-	B	d4
Q 1201	IC				LM2904PWR	G1094010		1-	B	b4
Q 1202	IC				SN74LVC2G04DBVR	G1094061		1-	B	c5
Q 1203	TRANSISTOR				2SC3356-T2B R24	G3333567D		1-	A	D1
Q 1204	TRANSISTOR				DTC144EUA T106	G3070041		1-	B	d2
Q 1205	POLY SWITCH				NANOSMDC035F(TAPE)	G9090167		1-	B	e1
Q 1206	TRANSISTOR				2SC4215Y(TE85R.F)	G3342157Y		7-	A	B3
Q 1207	FET				2SJ356C-T1-AZ	G3703568		7-	A	D3
Q 1208	TRANSISTOR				DTC144EUA T106	G3070041		7-	A	D3
Q 1209	TRANSISTOR				DTC144EUA T106	G3070041		7-	A	E3
Q 1210	TRANSISTOR				2SA1576A T106 R	G3115768R		7-	B	b3
Q 1211	TRANSISTOR				2SC4081 T106 R	G3340818R		11-	B	b1
Q 1212	TRANSISTOR				2SC4081 T106 R	G3340818R		11-	B	c1
R 1001	CHIP RES.	1k	1/16W	5%	RMC1/16 102JATP	J24185102		1-	A	E3
R 1002	CHIP RES.	150	1/4W	5%	RMC1/4 151JATP	J24245151		1-	A	E2
R 1003	CHIP RES.	68	1/10W	5%	RMC1/10T 680J	J24205680		1-	A	E2
R 1004	CHIP RES.	100k	1/16W	5%	RMC1/16 104JATP	J24185104		1-	B	a3
R 1005	CHIP RES.	680	1/16W	5%	RMC1/16 681JATP	J24185681		1-	A	D1
R 1006	CHIP RES.	1k	1/16W	5%	RMC1/16 102JATP	J24185102		1-10	A	E3
R 1007	CHIP RES.	6.8k	1/16W	5%	RMC1/16 682JATP	J24185682		1-	A	E3
R 1008	CHIP RES.	47k	1/16W	5%	RMC1/16 473JATP	J24185473		1-	A	E3
R 1009	CHIP RES.	47k	1/16W	5%	RMC1/16 473JATP	J24185473		1-10		
R 1010	CHIP RES.	10k	1/16W	5%	RMC1/16 103JATP	J24185103		1-6		
R 1011	CHIP RES.	3.3k	1/16W	5%	RMC1/16 332JATP	J24185332		1-10		
R 1012	CHIP RES.	22	1/16W	5%	RMC1/16 220JATP	J24185220		1-	B	a3
R 1013	CHIP RES.	22	1/16W	5%	RMC1/16 220JATP	J24185220		1-	B	a3
R 1014	CHIP RES.	10k	1/16W	5%	RMC1/16 103JATP	J24185103		1-	B	a2
R 1015	CHIP RES.	22	1/16W	5%	RMC1/16 220JATP	J24185220		1-	B	b2
R 1016	CHIP RES.	100	1/16W	5%	RMC1/16 101JATP	J24185101		1-	B	b3
R 1017	CHIP RES.	33k	1/16W	5%	RMC1/16 333JATP	J24185333		1-	A	D1
R 1019	CHIP RES.	10	1/16W	5%	RMC1/16 100JATP	J24185100		1-	A	D1
R 1020	CHIP RES.	100	1/16W	5%	RMC1/16 101JATP	J24185101		1-	B	b1
R 1021	CHIP CAP.	5pF	50V	CH	GRM1882C1H5R0CA01D	K22174206		6		
R 1022	CHIP RES.	0	1/16W	5%	RMC1/16 000JATP	J24185000		1-	A	D1
R 1024	CHIP RES.	4.7k	1/16W	5%	RMC1/16 472JATP	J24185472		1-	A	E3
R 1026	CHIP RES.	10	1/16W	5%	RMC1/16 100JATP	J24185100		1-	A	D1
R 1026	CHIP RES.	10	1/16W	5%	RMC1/16S 100JTH	J24189001		11-	A	D1
R 1027	CHIP RES.	330	1/4W	5%	RMC1/4 331JATP	J24245331		1-	A	E3
R 1028	CHIP RES.	100	1/16W	5%	RMC1/16 101JATP	J24185101		1-	B	a3
R 1028	CHIP RES.	4.7k	1/16W	5%	RMC1/16S 472JTH	J24189033		11-	B	a3
R 1029	CHIP RES.	1M	1/16W	5%	RMC1/16 105JATP	J24185105		1-	B	a3
R 1030	CHIP RES.	100	1/16W	5%	RMC1/16 101JATP	J24185101		1-10		
R 1031	CHIP RES.	100	1/16W	5%	RMC1/16 101JATP	J24185101		1-	B	a3
R 1031	CHIP RES.	4.7k	1/16W	5%	RMC1/16S 472JTH	J24189033		11-	B	a3
R 1032	CHIP RES.	4.7k	1/16W	5%	RMC1/16 472JATP	J24185472		1-	B	a3
R 1032	CHIP RES.	4.7k	1/16W	5%	RMC1/16S 472JTH	J24189033		7-	B	a3
R 1032	CHIP RES.	4.7k	1/16W	5%	RMC1/16 472JATP	J24185472		11-	B	a3
R 1033	CHIP RES.	100	1/16W	5%	RMC1/16 101JATP	J24185101		1-	B	a3
R 1034	CHIP RES.	100	1/16W	5%	RMC1/16 101JATP	J24185101		1-	B	a3
R 1035	CHIP RES.	100	1/16W	5%	RMC1/16 101JATP	J24185101		1-	B	a3
R 1036	CHIP RES.	10	1/16W	5%	RMC1/16 100JATP	J24185100		1-	A	B5
R 1037	CHIP RES.	10k	1/16W	5%	RMC1/16S 103JTH	J24189037		1-	A	B5
R 1038	CHIP RES.	470k	1/16W	5%	RMC1/16S 474JTH	J24189057		1-	A	B5
R 1039	CHIP RES.	470k	1/16W	5%	RMC1/16S 474JTH	J24189057		1-	A	B5
R 1040	CHIP RES.	4.7k	1/16W	1%	RMC1/16SK472FTH	J24189488		1-	A	C5
R 1041	CHIP RES.	10k	1/16W	5%	RMC1/16S 103JTH	J24189037		1-	A	C5
R 1042	CHIP RES.	470k	1/16W	5%	RMC1/16S 474JTH	J24189057		1-	A	C5
R 1043	CHIP RES.	470k	1/16W	5%	RMC1/16S 474JTH	J24189057		1-	A	C5

REF	DESCRIPTION	VALUE	V/W	TOL.	MFR'S DESIG	YAESU P/N	VERS.	LOT	SIDE	LAY ADR
R 1044	CHIP RES.	470k	1/16W	5%	RMC1/16S 474JTH	J24189057		1-	A	C5
R 1045	CHIP RES.	470k	1/16W	5%	RMC1/16S 474JTH	J24189057		1-	A	C5
R 1046	CHIP RES.	220	1/16W	5%	RMC1/16 221JATP	J24185221		1-	A	E2
R 1047	CHIP RES.	220	1/10W	5%	RMC1/10T 221J	J24205221		1-	A	E2
R 1048	CHIP RES.	220	1/10W	5%	RMC1/10T 221J	J24205221		1-	B	b2
R 1049	CHIP RES.	220	1/16W	5%	RMC1/16 221JATP	J24185221		1-	A	D1
R 1050	CHIP RES.	22k	1/16W	5%	RMC1/16 223JATP	J24185223		1-	B	b1
R 1050	CHIP RES.	10k	1/16W	5%	RMC1/16 103JATP	J24185103		11-	B	b1
R 1051	CHIP RES.	10k	1/16W	5%	RMC1/16 103JATP	J24185103		1-	B	b1
R 1052	CHIP RES.	100k	1/16W	5%	RMC1/16 104JATP	J24185104		1-	A	D1
R 1052	CHIP RES.	150k	1/16W	5%	RMC1/16 154JATP	J24185154		11-	A	D1
R 1053	CHIP RES.	6.8k	1/16W	5%	RMC1/16 682JATP	J24185682		1-	A	D1
R 1055	CHIP RES.	330	1/4W	5%	RMC1/4 331JATP	J24245331		1-	A	E3
R 1056	CHIP RES.	4.7k	1/16W	5%	RMC1/16 472JATP	J24185472		1-	A	E3
R 1057	CHIP RES.	47	1/16W	5%	RMC1/16 470JATP	J24185470		1-	B	b3
R 1058	CHIP RES.	100k	1/16W	5%	RMC1/16 104JATP	J24185104		1-	B	a3
R 1059	CHIP RES.	100	1/16W	5%	RMC1/16 101JATP	J24185101		1-	B	a3
R 1061	CHIP RES.	4.7k	1/16W	5%	RMC1/16S 472JTH	J24189033		1-	A	C5
R 1062	CHIP RES.	4.7k	1/16W	5%	RMC1/16S 472JTH	J24189033		1-	A	C5
R 1063	CHIP RES.	27	1/16W	5%	RMC1/16 270JATP	J24185270		1-	A	E2
R 1064	CHIP RES.	220	1/16W	5%	RMC1/16 221JATP	J24185221		1-	A	E2
R 1065	CHIP RES.	10k	1/16W	5%	RMC1/16 103JATP	J24185103		1-	B	a2
R 1066	CHIP RES.	2.2k	1/16W	5%	RMC1/16 222JATP	J24185222		1-	B	b2
R 1067	CHIP RES.	47	1/16W	5%	RMC1/16 470JATP	J24185470		1-	B	b2
R 1068	CHIP RES.	10k	1/16W	5%	RMC1/16 103JATP	J24185103		1-	B	b2
R 1069	CHIP RES.	220	1/10W	5%	RMC1/10T 221J	J24205221		1-	A	E2
R 1070	CHIP RES.	47	1/16W	5%	RMC1/16 470JATP	J24185470		1-	A	E3
R 1071	CHIP RES.	220	1/10W	5%	RMC1/10T 221J	J24205221		1-	A	E1
R 1072	CHIP RES.	47	1/16W	5%	RMC1/16 470JATP	J24185470		1-	A	E1
R 1075	CHIP RES.	1k	1/16W	5%	RMC1/16 102JATP	J24185102		1-	B	b1
R 1076	CHIP RES.	4.7k	1/16W	5%	RMC1/16S 472JTH	J24189033		1-	A	B4
R 1076	CHIP RES.	10k	1/16W	5%	RMC1/16S 103JTH	J24189037		7-	A	B4
R 1077	CHIP RES.	10k	1/16W	5%	RMC1/16 103JATP	J24185103		1-	A	B5
R 1078	CHIP RES.	10k	1/16W	5%	RMC1/16 103JATP	J24185103		1-	A	B5
R 1079	CHIP RES.	47k	1/16W	5%	RMC1/16 473JATP	J24185473		1-	B	b2
R 1081	CHIP RES.	220	1/10W	5%	RMC1/10T 221J	J24205221		1-	B	c2
R 1082	CHIP RES.	47	1/16W	5%	RMC1/16 470JATP	J24185470		1-	B	c2
R 1083	CHIP RES.	47	1/16W	5%	RMC1/16 470JATP	J24185470		1-	A	D1
R 1084	CHIP RES.	100	1/16W	5%	RMC1/16 101JATP	J24185101		1-	A	D1
R 1085	CHIP RES.	330	1/16W	5%	RMC1/16 331JATP	J24185331		1-	A	D1
R 1086	CHIP RES.	220	1/16W	5%	RMC1/16 221JATP	J24185221		1-	A	E3
R 1087	CHIP RES.	33	1/16W	5%	RMC1/16 330JATP	J24185330		1-	A	E2
R 1088	CHIP RES.	220	1/16W	5%	RMC1/16 221JATP	J24185221		1-	A	D3
R 1089	CHIP RES.	220	1/16W	5%	RMC1/16 221JATP	J24185221		1-	A	E2
R 1090	CHIP RES.	33	1/16W	5%	RMC1/16 330JATP	J24185330		1-	A	E2
R 1091	CHIP RES.	220	1/16W	5%	RMC1/16 221JATP	J24185221		1-	A	D2
R 1092	CHIP RES.	220	1/16W	5%	RMC1/16 221JATP	J24185221		1-	A	E2
R 1093	CHIP RES.	220	1/16W	5%	RMC1/16 221JATP	J24185221		1-	A	E2
R 1094	CHIP RES.	33	1/16W	5%	RMC1/16 330JATP	J24185330		1-	A	E2
R 1095	CHIP RES.	220	1/16W	5%	RMC1/16 221JATP	J24185221		1-	A	D2
R 1096	CHIP RES.	220	1/16W	5%	RMC1/16 221JATP	J24185221		1-	A	D2
R 1097	CHIP RES.	33	1/16W	5%	RMC1/16 330JATP	J24185330		1-	A	E2
R 1098	CHIP RES.	10k	1/16W	5%	RMC1/16S 103JTH	J24189037		1-	A	B4
R 1099	CHIP RES.	10k	1/16W	5%	RMC1/16S 103JTH	J24189037		1-	A	B4
R 1100	CHIP RES.	10k	1/16W	5%	RMC1/16S 103JTH	J24189037		1-	A	B4
R 1101	CHIP RES.	10k	1/16W	5%	RMC1/16S 103JTH	J24189037		1-	A	C4
R 1102	CHIP RES.	0	1/16W	5%	RMC1/16 000JATP	J24185000		1-	A	D1
R 1103	CHIP RES.	1k	1/16W	5%	RMC1/16 102JATP	J24185102		1-	A	D1
R 1104	CHIP RES.	47	1/16W	5%	RMC1/16 470JATP	J24185470		1-	A	D1
R 1105	CHIP RES.	10	1/16W	5%	RMC1/16 100JATP	J24185100		1-	B	c1
R 1106	CHIP RES.	220	1/10W	5%	RMC1/10T 221J	J24205221		1-	B	c1
R 1107	CHIP RES.	47	1/16W	5%	RMC1/16 470JATP	J24185470		1-	B	b1
R 1108	CHIP RES.	1k	1/16W	5%	RMC1/16 102JATP	J24185102		1-	B	c2
R 1110	CHIP RES.	220	1/10W	5%	RMC1/10T 221J	J24205221		1-	B	c2
R 1112	CHIP RES.	4.7k	1/16W	5%	RMC1/16 472JATP	J24185472		1-	B	d5
R 1113	CHIP RES.	47k	1/16W	5%	RMC1/16S 473JTH	J24189045		1-	A	C4
R 1114	CHIP RES.	3.3k	1/16W	5%	RMC1/16S 332JTH	J24189031		1-	A	B4
R 1115	CHIP RES.	100	1/10W	5%	RMC1/10T 101J	J24205101		1-	B	c1
R 1116	CHIP RES.	47	1/16W	5%	RMC1/16 470JATP	J24185470		1-	B	c1
R 1117	CHIP RES.	10k	1/16W	5%	RMC1/16 103JATP	J24185103		1-	B	b1
R 1118	CHIP RES.	47	1/16W	5%	RMC1/16 470JATP	J24185470		1-	B	c2
R 1119	CHIP RES.	0	1/16W	5%	RMC1/16 000JATP	J24185000		1-	A	C2
R 1120	CHIP RES.	47	1/16W	5%	RMC1/16 470JATP	J24185470		1-	B	c1
R 1121	CHIP RES.	33	1/16W	5%	RMC1/16 330JATP	J24185330		1-10		
R 1122	CHIP RES.	6.8	1/2W	5%	RMC1/2 6R8JCTP	J24275689		1-	A	B4

REF	DESCRIPTION	VALUE	V/W	TOL.	MFR'S DESIG	YAESU P/N	VERS.	LOT	SIDE	LAY ADR
R 1123	CHIP RES.	4.7k	1/16W	5%	RMC1/16 472JATP	J24185472		1-	B	d5
R 1124	CHIP RES.	4.7k	1/16W	5%	RMC1/16 472JATP	J24185472		1-	B	d5
R 1125	CHIP RES.	4.7k	1/16W	5%	RMC1/16 472JATP	J24185472		1-	B	d5
R 1126	CHIP RES.	4.7k	1/16W	5%	RMC1/16 472JATP	J24185472		1-	B	d5
R 1127	CHIP RES.	4.7k	1/16W	5%	RMC1/16 472JATP	J24185472		1-	B	d5
R 1128	CHIP RES.	47k	1/16W	5%	RMC1/16S 473JTH	J24189045		1-	A	C4
R 1129	CHIP RES.	47k	1/16W	5%	RMC1/16S 473JTH	J24189045		1-	A	C4
R 1131	CHIP RES.	10k	1/16W	5%	RMC1/16S 103JTH	J24189037		1-	A	B4
R 1132	CHIP RES.	10k	1/16W	5%	RMC1/16S 103JTH	J24189037		1-	A	B4
R 1133	CHIP RES.	47k	1/16W	5%	RMC1/16S 473JTH	J24189045		1-	A	B4
R 1134	CHIP RES.	47k	1/16W	5%	RMC1/16S 473JTH	J24189045		1-	A	B4
R 1135	CHIP RES.	47k	1/16W	5%	RMC1/16S 473JTH	J24189045		1-	A	C5
R 1136	CHIP RES.	47k	1/16W	5%	RMC1/16 473JATP	J24185473		1-	B	b1
R 1137	CHIP RES.	220	1/10W	5%	RMC1/10T 221J	J24205221		1-	A	E1
R 1138	CHIP RES.	220	1/16W	5%	RMC1/16 221JATP	J24185221		1-	A	D1
R 1139	CHIP RES.	68	1/16W	5%	RMC1/16 680JATP	J24185680		1-	A	D1
R 1140	CHIP RES.	10k	1/16W	5%	RMC1/16 103JATP	J24185103		1-	B	c2
R 1141	CHIP RES.	5.6k	1/16W	5%	RMC1/16 562JATP	J24185562		1-	B	c2
R 1142	CHIP RES.	820	1/16W	5%	RMC1/16 821JATP	J24185821		1-	A	C2
R 1143	CHIP RES.	6.8	1/16W	5%	RMC1/16 6R8JATP	J24185689		1-	A	C2
R 1144	CHIP RES.	820	1/16W	5%	RMC1/16 821JATP	J24185821		1-	A	C2
R 1145	CHIP RES.	6.8k	1/16W	1%	RMC1/16 682FTP	J24183682		1-	B	c1
R 1146	CHIP RES.	68k	1/16W	1%	RMC1/16 683FTP	J24183683		1-	B	c1
R 1147	CHIP RES.	22k	1/16W	1%	RMC1/16 223FTP	J24183223		1-	B	d1
R 1148	CHIP RES.	47k	1/16W	1%	RMC1/16 473FTP	J24183473		1-	B	c1
R 1149	CHIP RES.	4.7k	1/16W	1%	RMC1/16 472FTP	J24183472		1-	B	c1
R 1151	CHIP RES.	6.8k	1/16W	1%	RMC1/16 682FTP	J24183682		1-	B	c1
R 1152	CHIP RES.	68k	1/16W	1%	RMC1/16 683FTP	J24183683		1-	B	c1
R 1153	CHIP RES.	22k	1/16W	1%	RMC1/16 223FTP	J24183223		1-	B	c1
R 1154	CHIP RES.	47k	1/16W	1%	RMC1/16 473FTP	J24183473		1-	B	c1
R 1155	CHIP RES.	4.7k	1/16W	1%	RMC1/16 472FTP	J24183472		1-	B	c1
R 1156	CHIP RES.	47k	1/16W	5%	RMC1/16 473JATP	J24185473		1-10		
R 1157	CHIP RES.	100k	1/16W	5%	RMC1/16 104JATP	J24185104		1-10		
R 1158	CHIP RES.	100k	1/16W	5%	RMC1/16S 104JTH	J24189049		1-	A	C5
R 1159	CHIP RES.	47k	1/16W	5%	RMC1/16S 473JTH	J24189045		1-	A	B5
R 1160	CHIP RES.	47k	1/16W	5%	RMC1/16S 473JTH	J24189045		1-	A	B5
R 1161	CHIP RES.	6.8	1/16W	5%	RMC1/16 6R8JATP	J24185689		1-	A	C2
R 1162	CHIP RES.	220	1/16W	5%	RMC1/16 221JATP	J24185221		1-	A	A2
R 1163	CHIP RES.	820	1/16W	5%	RMC1/16 821JATP	J24185821		1-	A	C2
R 1164	CHIP RES.	820	1/16W	5%	RMC1/16 821JATP	J24185821		1-	A	C2
R 1165	CHIP RES.	680	1/16W	5%	RMC1/16 681JATP	J24185681		1-	A	C2
R 1166	CHIP RES.	4.7k	1/16W	5%	RMC1/16 472JATP	J24185472		1-	B	c2
R 1167	CHIP RES.	68k	1/16W	5%	RMC1/16 683JATP	J24185683		1-	B	c1
R 1168	CHIP RES.	220k	1/16W	5%	RMC1/16 224JATP	J24185224		1-	B	c1
R 1169	CHIP RES.	150k	1/16W	5%	RMC1/16 154JATP	J24185154		1-	B	c1
R 1170	CHIP RES.	47k	1/16W	5%	RMC1/16 473JATP	J24185473		1-	B	c1
R 1171	CHIP RES.	330	1/16W	5%	RMC1/16 331JATP	J24185331		1-	B	c1
R 1172	CHIP RES.	220	1/16W	5%	RMC1/16 221JATP	J24185221		1-	B	c1
R 1173	CHIP RES.	10k	1/16W	5%	RMC1/16 103JATP	J24185103		1-	B	c1
R 1175	CHIP RES.	33k	1/16W	5%	RMC1/16 333JATP	J24185333		1-	B	c1
R 1176	CHIP RES.	100k	1/16W	5%	RMC1/16 104JATP	J24185104		1-	B	c1
R 1177	CHIP RES.	0	1/16W	5%	RMC1/16 000JATP	J24185000		1-	B	c1
R 1178	CHIP RES.	470	1/16W	5%	RMC1/16 471JATP	J24185471		1-	B	c1
R 1180	CHIP RES.	47k	1/16W	5%	RMC1/16 473JATP	J24185473		1-10		
R 1181	CHIP RES.	47k	1/16W	5%	RMC1/16 473JATP	J24185473		1-10		
R 1182	CHIP RES.	47k	1/16W	5%	RMC1/16 473JATP	J24185473		1-10		
R 1183	CHIP RES.	470k	1/16W	5%	RMC1/16 474JATP	J24185474		1-10		
R 1184	CHIP RES.	120k	1/16W	5%	RMC1/16 124JATP	J24185124		1-10		
R 1185	CHIP RES.	47k	1/16W	5%	RMC1/16 473JATP	J24185473		1-	A	D4
R 1186	CHIP RES.	47k	1/16W	5%	RMC1/16 473JATP	J24185473		1-	A	D4
R 1187	CHIP RES.	47k	1/16W	5%	RMC1/16 473JATP	J24185473		1-	A	D4
R 1188	CHIP RES.	10k	1/16W	5%	RMC1/16 103JATP	J24185103		1-	A	D4
R 1189	CHIP RES.	10k	1/16W	5%	RMC1/16 103JATP	J24185103		1-	A	C4
R 1190	CHIP RES.	100k	1/16W	5%	RMC1/16 104JATP	J24185104		1-	A	C4
R 1191	CHIP RES.	47k	1/16W	5%	RMC1/16 473JATP	J24185473		1-	A	D4
R 1192	CHIP RES.	10k	1/16W	5%	RMC1/16 103JATP	J24185103		1-	A	D4
R 1193	CHIP RES.	47k	1/16W	5%	RMC1/16 473JATP	J24185473		1-	A	D4
R 1194	CHIP RES.	1k	1/16W	5%	RMC1/16 102JATP	J24185102		1-	A	D3
R 1196	CHIP RES.	100k	1/16W	5%	RMC1/16 104JATP	J24185104		1-	A	C4
R 1197	CHIP RES.	330k	1/16W	5%	RMC1/16 334JATP	J24185334		1-	A	D4
R 1198	CHIP RES.	2.2	1/16W	5%	RMC1/16 2R2JATP	J24185229		1-	A	B2
R 1199	CHIP RES.	2.2	1/16W	5%	RMC1/16 2R2JATP	J24185229		1-	A	B2
R 1200	CHIP RES.	100	1/16W	5%	RMC1/16 101JATP	J24185101		1-	B	e2
R 1201	CHIP RES.	15k	1/16W	5%	RMC1/16 153JATP	J24185153		1-	B	e2
R 1202	CHIP RES.	10k	1/16W	5%	RMC1/16 103JATP	J24185103		1-	B	e2

REF	DESCRIPTION	VALUE	V/W	TOL.	MFR'S DESIG	YAESU P/N	VERS.	LOT	SIDE	LAY ADR
R 1204	CHIP RES.	2.2k	1/16W	5%	RMC1/16 222JATP	J24185222		1-	A	C2
R 1205	CHIP RES.	4.7k	1/16W	5%	RMC1/16 472JATP	J24185472		1-	B	c2
R 1206	CHIP RES.	4.7k	1/16W	5%	RMC1/16 472JATP	J24185472		1-	B	c2
R 1207	CHIP RES.	33k	1/16W	5%	RMC1/16 333JATP	J24185333		1-	A	C2
R 1208	CHIP RES.	18	1/16W	5%	RMC1/16 180JATP	J24185180		1-	A	C2
R 1209	CHIP RES.	47k	1/16W	5%	RMC1/16 473JATP	J24185473		1-	B	c1
R 1210	CHIP RES.	330	1/16W	5%	RMC1/16 331JATP	J24185331		1-	B	c1
R 1211	CHIP RES.	220	1/16W	5%	RMC1/16 221JATP	J24185221		1-	B	c1
R 1211	CHIP RES.	1k	1/16W	5%	RMC1/16 102JATP	J24185102		6-	B	c1
R 1212	CHIP RES.	100k	1/16W	5%	RMC1/16 104JATP	J24185104		1-	B	b1
R 1212	CHIP RES.	220k	1/16W	5%	RMC1/16 224JATP	J24185224		6-	B	b1
R 1213	CHIP RES.	4.7k	1/16W	5%	RMC1/16 472JATP	J24185472		1-	B	c1
R 1214	CHIP RES.	100	1/16W	5%	RMC1/16 101JATP	J24185101		1-	B	b1
R 1215	CHIP RES.	390k	1/16W	5%	RMC1/16 394JATP	J24185394		1-10		
R 1216	CHIP RES.	1M	1/16W	5%	RMC1/16 105JATP	J24185105		1-10		
R 1217	CHIP RES.	270k	1/16W	5%	RMC1/16 274JATP	J24185274		1-10		
R 1218	CHIP RES.	15	1/2W	5%	RMC1/2 150JCTP	J24275150		1-	A	D5
R 1219	CHIP RES.	470k	1/16W	5%	RMC1/16 474JATP	J24185474		1-10		
R 1220	CHIP RES.	470k	1/16W	5%	RMC1/16 474JATP	J24185474		1-10		
R 1221	CHIP RES.	10k	1/16W	1%	RMC1/16 103FTP	J24183103		1-	A	D3
R 1222	CHIP RES.	10k	1/16W	1%	RMC1/16 103FTP	J24183103		1-	A	D3
R 1226	CHIP RES.	51	1/16W	1%	RMC1/16 510FTP	J24183510		1-	A	C1
R 1227	CHIP RES.	51	1/16W	1%	RMC1/16 510FTP	J24183510		1-	A	C1
R 1231	CHIP RES.	5.6k	1/16W	5%	RMC1/16 562JATP	J24185562		1-	B	d2
R 1234	CHIP RES.	10k	1/16W	5%	RMC1/16 103JATP	J24185103		1-	B	d2
R 1235	CHIP RES.	330	1/16W	5%	RMC1/16 331JATP	J24185331		1-	A	C2
R 1236	CHIP RES.	330	1/16W	5%	RMC1/16 331JATP	J24185331		1-	A	C2
R 1237	CHIP RES.	10	1/16W	5%	RMC1/16 100JATP	J24185100		1-	B	c2
R 1238	CHIP RES.	10k	1/16W	5%	RMC1/16 103JATP	J24185103		1-	B	c2
R 1239	CHIP RES.	100	1/16W	5%	RMC1/16 101JATP	J24185101		1-	B	c2
R 1241	CHIP RES.	30k	1/16W	1%	RMC1/16 303FTP	J24183303		1-	B	b1
R 1242	CHIP RES.	10k	1/16W	5%	RMC1/16 103JATP	J24185103		1-	B	c1
R 1243	CHIP RES.	1k	1/16W	5%	RMC1/16 102JATP	J24185102		1-	B	b1
R 1245	CHIP RES.	3.3k	1/16W	5%	RMC1/16 332JATP	J24185332		1-	B	b1
R 1246	CHIP RES.	10k	1/16W	5%	RMC1/16 103JATP	J24185103		1-	B	b1
R 1247	CHIP RES.	0	1/16W	5%	RMC1/16 000JATP	J24185000		1-	B	c1
R 1248	CHIP RES.	470k	1/16W	5%	RMC1/16 474JATP	J24185474		1-	B	b1
R 1249	CHIP RES.	33k	1/16W	5%	RMC1/16 333JATP	J24185333		1-	B	b1
R 1250	CHIP RES.	4.7k	1/16W	5%	RMC1/16 472JATP	J24185472		1-	B	b1
R 1251	CHIP RES.	22k	1/16W	5%	RMC1/16 223JATP	J24185223		1-	B	c1
R 1252	CHIP RES.	5.6k	1/16W	1%	RMC1/16 562FTP	J24183562		1-	B	b1
R 1253	CHIP RES.	100k	1/16W	5%	RMC1/16 104JATP	J24185104		1-10		
R 1254	CHIP RES.	10k	1/16W	5%	RMC1/16 103JATP	J24185103		1-	B	d2
R 1256	CHIP RES.	1k	1/16W	5%	RMC1/16 102JATP	J24185102		1-	B	d2
R 1257	CHIP RES.	10k	1/16W	5%	RMC1/16 103JATP	J24185103		1-	B	d1
R 1258	CHIP RES.	33k	1/16W	5%	RMC1/16 333JATP	J24185333		1-	B	d1
R 1259	CHIP RES.	47	1/16W	5%	RMC1/16 470JATP	J24185470		1-	B	d1
R 1260	CHIP RES.	10	1/16W	5%	RMC1/16 100JATP	J24185100		1-	B	d3
R 1261	CHIP RES.	100k	1/16W	5%	RMC1/16 104JATP	J24185104		1-	B	d1
R 1263	CHIP RES.	33	1/16W	5%	RMC1/16 330JATP	J24185330		1-	B	d3
R 1264	CHIP RES.	15	1/16W	5%	RMC1/16 150JATP	J24185150		1-	B	d3
R 1265	CHIP RES.	220	1/16W	5%	RMC1/16 221JATP	J24185221		1-	B	d3
R 1266	CHIP RES.	100	1/16W	5%	RMC1/16 101JATP	J24185101		1-	B	d3
R 1267	CHIP RES.	470	1/16W	5%	RMC1/16 471JATP	J24185471		1-	B	d3
R 1268	CHIP RES.	47k	1/16W	5%	RMC1/16 473JATP	J24185473		1-	B	d3
R 1269	CHIP RES.	100k	1/16W	1%	RMC1/16 104FTP	J24183104		1-	B	b1
R 1270	CHIP RES.	4.7k	1/16W	1%	RMC1/16 472FTP	J24183472		1-	B	b1
R 1271	CHIP RES.	10	1/16W	5%	RMC1/16 100JATP	J24185100		1-	B	c4
R 1272	CHIP RES.	100k	1/16W	1%	RMC1/16 104FTP	J24183104		1-	B	b1
R 1273	CHIP RES.	4.7k	1/16W	1%	RMC1/16 472FTP	J24183472		1-	B	b1
R 1274	CHIP RES.	4.7k	1/16W	1%	RMC1/16 472FTP	J24183472		1-	B	b1
R 1275	CHIP RES.	470k	1/16W	5%	RMC1/16 474JATP	J24185474		1-	A	D5
R 1276	CHIP RES.	30k	1/16W	1%	RMC1/16 303FTP	J24183303		1-	A	D4
R 1277	CHIP RES.	30k	1/16W	1%	RMC1/16 303FTP	J24183303		1-	A	D4
R 1278	CHIP RES.	30k	1/16W	1%	RMC1/16 303FTP	J24183303		1-	A	D4
R 1279	CHIP RES.	10	1/16W	5%	RMC1/16 100JATP	J24185100		1-	B	c3
R 1280	CHIP RES.	10	1/16W	5%	RMC1/16 100JATP	J24185100		1-	B	c3
R 1281	CHIP RES.	1k	1/16W	5%	RMC1/16 102JATP	J24185102		1-	B	d2
R 1282	CHIP RES.	1k	1/16W	5%	RMC1/16 102JATP	J24185102		1-	B	d2
R 1283	CHIP RES.	47k	1/16W	5%	RMC1/16 473JATP	J24185473		1-	B	e1
R 1284	CHIP RES.	470	1/16W	5%	RMC1/16S 471JTH	J24189021		1-	A	B1
R 1285	CHIP RES.	100k	1/16W	5%	RMC1/16 104JATP	J24185104		1-	B	d2
R 1286	CHIP RES.	22k	1/16W	5%	RMC1/16 223JATP	J24185223		1-	B	d1
R 1288	CHIP RES.	100k	1/16W	5%	RMC1/16 104JATP	J24185104		1-	B	d1
R 1289	CHIP RES.	2.2k	1/16W	5%	RMC1/16 222JATP	J24185222		1-	B	d1

REF	DESCRIPTION	VALUE	V/W	TOL.	MFR'S DESIG	YAESU P/N	VERS.	LOT	SIDE	LAY ADR
R 1290	CHIP RES.	10k	1/16W	5%	RMC1/16 103JATP	J24185103		1-	B	d1
R 1291	CHIP RES.	1k	1/16W	5%	RMC1/16 102JATP	J24185102		1-	B	d1
R 1292	CHIP RES.	39k	1/16W	5%	RMC1/16 393JATP	J24185393		1-	B	d2
R 1293	CHIP RES.	10k	1/16W	5%	RMC1/16 103JATP	J24185103		1-	B	d3
R 1294	CHIP RES.	1k	1/16W	5%	RMC1/16 102JATP	J24185102		1-	B	d3
R 1295	CHIP RES.	22k	1/16W	1%	RMC1/16 223FTP	J24183223		1-	B	d3
R 1296	CHIP RES.	10k	1/16W	5%	RMC1/16 103JATP	J24185103		1-	B	c4
R 1297	CHIP RES.	10k	1/16W	5%	RMC1/16 103JATP	J24185103		1-	B	d4
R 1298	CHIP RES.	4.7k	1/16W	5%	RMC1/16 472JATP	J24185472		1-	B	d4
R 1299	CHIP RES.	1k	1/16W	5%	RMC1/16 102JATP	J24185102		1-	A	E5
R 1300	CHIP RES.	10k	1/16W	5%	RMC1/16 103JATP	J24185103		1-	A	E5
R 1301	CHIP RES.	10k	1/16W	5%	RMC1/16 103JATP	J24185103		1-	B	c4
R 1302	CHIP RES.	10k	1/16W	5%	RMC1/16 103JATP	J24185103		1-	A	D5
R 1303	CHIP RES.	47	1/16W	5%	RMC1/16 470JATP	J24185470		1-	A	D5
R 1304	CHIP RES.	2.2k	1/16W	5%	RMC1/16 222JATP	J24185222		1-	B	c4
R 1305	CHIP RES.	820k	1/16W	5%	RMC1/16 824JATP	J24185824		1-	A	D4
R 1306	CHIP RES.	100k	1/16W	5%	RMC1/16 104JATP	J24185104		1-	A	D5
R 1307	CHIP RES.	10	1/16W	5%	RMC1/16 100JATP	J24185100		1-	B	c4
R 1308	CHIP RES.	10k	1/16W	5%	RMC1/16 103JATP	J24185103		1-	A	D5
R 1309	CHIP RES.	470	1/16W	5%	RMC1/16 471JATP	J24185471		1-	B	c4
R 1310	CHIP RES.	470	1/16W	5%	RMC1/16 471JATP	J24185471		1-	B	c4
R 1311	CHIP RES.	470	1/16W	5%	RMC1/16 471JATP	J24185471		1-	B	c4
R 1312	CHIP RES.	470	1/16W	5%	RMC1/16 471JATP	J24185471		1-	B	c4
R 1313	CHIP RES.	470	1/16W	5%	RMC1/16 471JATP	J24185471		1-	B	c4
R 1314	CHIP RES.	470	1/16W	5%	RMC1/16 471JATP	J24185471		1-	B	c4
R 1315	CHIP RES.	68	1/2W	5%	RMC1/2 680JCTP	J24275680		1-	A	D3
R 1317	CHIP RES.	10	1/16W	5%	RMC1/16 100JATP	J24185100		1-	A	B2
R 1318	CHIP RES.	1.5k	1/16W	5%	RMC1/16 152JATP	J24185152		1-	B	e1
R 1319	CHIP RES.	470	1/16W	5%	RMC1/16 471JATP	J24185471		1-	B	d1
R 1320	CHIP RES.	120k	1/16W	5%	RMC1/16 124JATP	J24185124		1-	A	B2
R 1321	CHIP RES.	100	1/16W	5%	RMC1/16S 101JTH	J24189013		1-	A	B2
R 1322	CHIP RES.	47k	1/16W	5%	RMC1/16 473JATP	J24185473		1-	B	e2
R 1323	CHIP RES.	22k	1/16W	5%	RMC1/16 223JATP	J24185223		1-	B	d1
R 1324	CHIP RES.	10k	1/16W	5%	RMC1/16 103JATP	J24185103		1-	B	e1
R 1325	CHIP RES.	47k	1/16W	5%	RMC1/16 473JATP	J24185473		1-	B	d2
R 1326	CHIP RES.	4.7k	1/16W	5%	RMC1/16 472JATP	J24185472		1-	B	d2
R 1327	CHIP RES.	10k	1/16W	5%	RMC1/16 103JATP	J24185103		1-	B	e1
R 1328	CHIP RES.	4.7k	1/16W	5%	RMC1/16 472JATP	J24185472		1-	B	d2
R 1329	CHIP RES.	100k	1/16W	1%	RMC1/16 104FTP	J24183104		1-	B	d3
R 1330	CHIP RES.	4.7k	1/16W	5%	RMC1/16 472JATP	J24185472		1-	B	d3
R 1331	CHIP RES.	6.8k	1/16W	1%	RMC1/16 682FTP	J24183682		1-	B	d3
R 1332	CHIP RES.	6.8k	1/16W	1%	RMC1/16 682FTP	J24183682		1-	B	d3
R 1333	CHIP RES.	33	1/16W	5%	RMC1/16 330JATP	J24185330		1-	B	d2
R 1334	CHIP RES.	6.8k	1/16W	5%	RMC1/16 682JATP	J24185682		1-	B	d3
R 1335	CHIP RES.	15k	1/16W	5%	RMC1/16 153JATP	J24185153		1-	B	d2
R 1337	CHIP RES.	10k	1/16W	5%	RMC1/16 103JATP	J24185103		1-	B	d4
R 1338	CHIP RES.	10k	1/16W	5%	RMC1/16 103JATP	J24185103		1-	B	d4
R 1339	CHIP RES.	2.2M	1/16W	5%	RMC1/16 225JATP	J24185225		1-	B	d4
R 1340	CHIP RES.	2.2k	1/16W	5%	RMC1/16 222JATP	J24185222		1-	A	E5
R 1341	CHIP RES.	2.2k	1/16W	5%	RMC1/16 222JATP	J24185222		1-	A	E5
R 1342	CHIP RES.	2.2k	1/16W	5%	RMC1/16 222JATP	J24185222		1-	A	E5
R 1343	CHIP RES.	1M	1/16W	5%	RMC1/16 105JATP	J24185105		1-	A	E5
R 1344	CHIP RES.	27k	1/16W	1%	RMC1/16 273FTP	J24183273		1-	B	c4
R 1345	CHIP RES.	2.2k	1/16W	5%	RMC1/16 222JATP	J24185222		1-	A	E5
R 1346	CHIP RES.	27k	1/16W	1%	RMC1/16 273FTP	J24183273		1-	B	c4
R 1347	CHIP RES.	330k	1/16W	5%	RMC1/16 334JATP	J24185334		1-	A	E5
R 1348	CHIP RES.	470k	1/16W	5%	RMC1/16 474JATP	J24185474		1-	A	E5
R 1349	CHIP RES.	470k	1/16W	5%	RMC1/16 474JATP	J24185474		1-	B	c4
R 1350	CHIP RES.	47k	1/16W	5%	RMC1/16 473JATP	J24185473		1-	A	D5
R 1351	CHIP RES.	470k	1/16W	5%	RMC1/16 474JATP	J24185474		1-	B	c4
R 1353	CHIP RES.	470	1/16W	5%	RMC1/16 471JATP	J24185471		1-	B	c4
R 1354	CHIP RES.	2.7k	1/16W	1%	RMC1/16 272FTP	J24183272		1-	A	D5
R 1355	CHIP RES.	10k	1/16W	5%	RMC1/16 103JATP	J24185103		1-	A	D5
R 1356	CHIP RES.	10	1/16W	5%	RMC1/16 100JATP	J24185100		1-	B	c3
R 1357	CHIP RES.	470	1/16W	5%	RMC1/16 471JATP	J24185471		1-	B	c3
R 1358	CHIP RES.	470	1/16W	5%	RMC1/16 471JATP	J24185471		1-	B	c4
R 1359	CHIP RES.	470	1/16W	5%	RMC1/16 471JATP	J24185471		1-	B	c4
R 1360	CHIP RES.	470	1/16W	5%	RMC1/16 471JATP	J24185471		1-	B	c3
R 1361	CHIP RES.	47	1W	5%	RMC1 470JTE	J24305470		1-	A	D3
R 1362	CHIP RES.	10	1/16W	5%	RMC1/16 100JATP	J24185100		1-	A	B2
R 1363	CHIP RES.	1.5k	1/16W	5%	RMC1/16 152JATP	J24185152		1-	A	B2
R 1364	CHIP RES.	22k	1/16W	5%	RMC1/16 223JATP	J24185223		1-	B	d2
R 1365	CHIP RES.	4.7k	1/16W	5%	RMC1/16 472JATP	J24185472		1-	B	d2
R 1366	CHIP RES.	10k	1/16W	5%	RMC1/16 103JATP	J24185103		1-	B	e1
R 1367	CHIP RES.	470	1/16W	5%	RMC1/16 471JATP	J24185471		1-	B	d2

REF	DESCRIPTION	VALUE	V/W	TOL.	MFR'S DESIG	YAESU P/N	VERS.	LOT	SIDE	LAY ADR
R 1368	CHIP RES.	22k	1/16W	5%	RMC1/16 223JATP	J24185223		1-	B	d2
R 1369	CHIP RES.	1k	1/16W	5%	RMC1/16 102JATP	J24185102		1-	B	d2
R 1370	CHIP RES.	1k	1/16W	5%	RMC1/16 102JATP	J24185102		1-	A	C2
R 1371	CHIP RES.	47k	1/16W	5%	RMC1/16 473JATP	J24185473		1-	B	e2
R 1372	CHIP RES.	4.7k	1/16W	5%	RMC1/16 472JATP	J24185472		1-	B	b1
R 1373	CHIP RES.	4.7k	1/16W	5%	RMC1/16 472JATP	J24185472		1-	B	b1
R 1374	CHIP RES.	1.5k	1/16W	5%	RMC1/16 152JATP	J24185152		1-	B	d3
R 1375	CHIP RES.	100	1/16W	5%	RMC1/16 101JATP	J24185101		1-	B	d2
R 1376	CHIP RES.	6.8k	1/16W	5%	RMC1/16 682JATP	J24185682		1-	B	d2
R 1377	CHIP RES.	220k	1/16W	5%	RMC1/16 224JATP	J24185224		1-	B	d4
R 1378	CHIP RES.	220k	1/16W	5%	RMC1/16 224JATP	J24185224		1-	B	d4
R 1379	CHIP RES.	330k	1/16W	5%	RMC1/16 334JATP	J24185334		1-	B	d4
R 1379	CHIP RES.	33k	1/16W	5%	RMC1/16 333JATP	J24185333		6-	B	d4
R 1380	CHIP RES.	10k	1/16W	5%	RMC1/16 103JATP	J24185103		1-	B	d4
R 1381	CHIP RES.	0	1/16W	5%	RMC1/16 000JATP	J24185000		1-	B	d4
R 1382	CHIP RES.	10k	1/16W	5%	RMC1/16 103JATP	J24185103		1-	B	d4
R 1382	CHIP RES.	2.2k	1/16W	5%	RMC1/16 222JATP	J24185222		6-	B	d4
R 1383	CHIP RES.	47k	1/16W	5%	RMC1/16 473JATP	J24185473		1-	A	E5
R 1384	CHIP RES.	10k	1/16W	5%	RMC1/16 103JATP	J24185103		1-	A	E5
R 1385	CHIP RES.	100k	1/16W	5%	RMC1/16 104JATP	J24185104		1-	A	E5
R 1386	CHIP RES.	22k	1/16W	5%	RMC1/16 223JATP	J24185223		1-	A	E5
R 1387	CHIP RES.	10k	1/16W	5%	RMC1/16 103JATP	J24185103		1-	A	E5
R 1388	CHIP RES.	10k	1/16W	5%	RMC1/16 103JATP	J24185103		1-	A	E5
R 1389	CHIP RES.	10k	1/16W	5%	RMC1/16 103JATP	J24185103		1-	A	E5
R 1390	CHIP RES.	27k	1/16W	1%	RMC1/16 273FTP	J24183273		1-	B	c4
R 1391	CHIP RES.	68k	1/16W	5%	RMC1/16 683JATP	J24185683		1-	A	E5
R 1392	CHIP RES.	10k	1/16W	5%	RMC1/16 103JATP	J24185103		1-	A	E5
R 1393	CHIP RES.	150k	1/16W	5%	RMC1/16 154JATP	J24185154		1-	B	c4
R 1394	CHIP RES.	3.3k	1/16W	5%	RMC1/16 332JATP	J24185332		1-	A	E5
R 1395	CHIP RES.	4.7k	1/16W	5%	RMC1/16 472JATP	J24185472		1-	A	E5
R 1396	CHIP RES.	6.8k	1/16W	5%	RMC1/16 682JATP	J24185682		1-	B	c4
R 1397	CHIP RES.	30k	1/16W	1%	RMC1/16 303FTP	J24183303		1-	A	D5
R 1398	CHIP RES.	4.7k	1/16W	5%	RMC1/16 472JATP	J24185472		1-	B	c4
R 1399	CHIP RES.	30k	1/16W	1%	RMC1/16 303FTP	J24183303		1-	A	D5
R 1400	CHIP RES.	30k	1/16W	1%	RMC1/16 303FTP	J24183303		1-	A	D5
R 1401	CHIP RES.	10k	1/16W	5%	RMC1/16 103JATP	J24185103		1-	B	c4
R 1402	CHIP RES.	6.8k	1/16W	5%	RMC1/16 682JATP	J24185682		1-	A	D5
R 1403	CHIP RES.	1M	1/16W	5%	RMC1/16 105JATP	J24185105		1-	A	D5
R 1404	CHIP RES.	3.3k	1/16W	5%	RMC1/16 332JATP	J24185332		1-	A	D5
R 1405	CHIP RES.	470	1/16W	5%	RMC1/16 471JATP	J24185471		1-	B	c3
R 1406	CHIP RES.	10k	1/16W	5%	RMC1/16 103JATP	J24185103		1-	B	d2
R 1407	CHIP RES.	5.6k	1/16W	5%	RMC1/16 562JATP	J24185562		1-	B	d2
R 1408	CHIP RES.	10	1/16W	5%	RMC1/16 100JATP	J24185100		1-	B	e2
R 1409	CHIP RES.	10	1/16W	5%	RMC1/16 100JATP	J24185100		1-	B	e2
R 1411	CHIP RES.	10	1/16W	5%	RMC1/16 100JATP	J24185100		1-	B	e2
R 1413	CHIP RES.	330	1/16W	5%	RMC1/16 331JATP	J24185331		1-	B	e2
R 1414	CHIP RES.	0	1/16W	5%	RMC1/16 000JATP	J24185000		1-	A	B2
R 1415	CHIP RES.	100	1/16W	5%	RMC1/16 101JATP	J24185101		1-	A	B2
R 1416	CHIP RES.	47	1/16W	5%	RMC1/16 470JATP	J24185470		1-	B	e3
R 1417	CHIP RES.	470	1/16W	5%	RMC1/16 471JATP	J24185471		1-	B	e3
R 1418	CHIP RES.	15k	1/16W	5%	RMC1/16 153JATP	J24185153		1-	B	d2
R 1419	CHIP RES.	1.5k	1/16W	5%	RMC1/16 152JATP	J24185152		1-	B	d2
R 1420	CHIP RES.	100	1/16W	5%	RMC1/16 101JATP	J24185101		1-	A	B2
R 1421	CHIP RES.	0	1/16W	5%	RMC1/16 000JATP	J24185000		1-	A	B2
R 1424	CHIP RES.	1M	1/16W	5%	RMC1/16 105JATP	J24185105		1-	B	c4
R 1425	CHIP RES.	3.3k	1/16W	5%	RMC1/16 332JATP	J24185332		1-	B	d4
R 1426	CHIP RES.	47k	1/16W	5%	RMC1/16 473JATP	J24185473		1-	B	d4
R 1427	CHIP RES.	100k	1/16W	5%	RMC1/16 104JATP	J24185104		1-	B	d4
R 1428	CHIP RES.	47	1/16W	5%	RMC1/16 470JATP	J24185470		1-	A	E5
R 1429	CHIP RES.	100k	1/16W	5%	RMC1/16 104JATP	J24185104		1-	A	E5
R 1430	CHIP RES.	33k	1/16W	5%	RMC1/16 333JATP	J24185333		1-	B	c4
R 1431	CHIP RES.	100k	1/16W	5%	RMC1/16 104JATP	J24185104		1-	A	D5
R 1432	CHIP RES.	4.7k	1/16W	5%	RMC1/16 472JATP	J24185472		1-	A	D5
R 1433	CHIP RES.	6.8k	1/16W	5%	RMC1/16 682JATP	J24185682		1-	A	D5
R 1434	CHIP RES.	4.7k	1/16W	5%	RMC1/16 472JATP	J24185472		1-	A	D5
R 1435	CHIP RES.	4.7k	1/16W	5%	RMC1/16 472JATP	J24185472		1-	A	E5
R 1436	CHIP RES.	1M	1/16W	5%	RMC1/16 105JATP	J24185105		1-	A	D5
R 1437	CHIP RES.	47	1/16W	5%	RMC1/16 470JATP	J24185470		1-	A	D5
R 1438	CHIP RES.	6.8k	1/16W	5%	RMC1/16 682JATP	J24185682		1-	A	D5
R 1439	CHIP RES.	10k	1/16W	5%	RMC1/16 103JATP	J24185103		1-	A	D5
R 1440	CHIP RES.	56k	1/16W	5%	RMC1/16 563JATP	J24185563		1-	A	D5
R 1441	CHIP RES.	10	1/16W	5%	RMC1/16 100JATP	J24185100		1-	B	d4
R 1442	CHIP RES.	4.7k	1/16W	1%	RMC1/16 472FTP	J24183472		1-	A	D5
R 1443	CHIP RES.	10k	1/16W	5%	RMC1/16 103JATP	J24185103		1-	A	D5
R 1444	CHIP RES.	33	1/16W	1%	RMC1/16 330FTP	J24183330		1-	A	C2

REF	DESCRIPTION	VALUE	V/W	TOL.	MFR'S DESIG	YAESU P/N	VERS.	LOT	SIDE	LAY ADR
R 1445	CHIP RES.	1k	1/16W	5%	RMC1/16 102JATP	J24185102		1-	A	C2
R 1446	CHIP RES.	100k	1/16W	5%	RMC1/16 104JATP	J24185104		1-	B	c1
R 1447	CHIP RES.	33	1/16W	1%	RMC1/16 330FTP	J24183330		1-	A	C1
R 1448	CHIP RES.	47k	1/16W	5%	RMC1/16 473JATP	J24185473		1-	B	c1
R 1449	CHIP RES.	100k	1/16W	5%	RMC1/16 104JATP	J24185104		1-	B	c1
R 1450	CHIP RES.	330	1/16W	5%	RMC1/16 331JATP	J24185331		1-	B	e2
R 1451	CHIP RES.	100	1/16W	5%	RMC1/16 101JATP	J24185101		1-	B	d2
R 1452	CHIP RES.	2.2k	1/16W	5%	RMC1/16 222JATP	J24185222		1-	B	d2
R 1453	CHIP RES.	330k	1/16W	5%	RMC1/16 334JATP	J24185334		1-	B	e2
R 1456	CHIP RES.	1.5k	1/16W	5%	RMC1/16 152JATP	J24185152		1-	B	d1
R 1457	CHIP RES.	100k	1/16W	5%	RMC1/16 104JATP	J24185104		1-	B	d4
R 1458	CHIP RES.	100k	1/16W	5%	RMC1/16 104JATP	J24185104		1-	B	d3
R 1459	CHIP RES.	470k	1/16W	5%	RMC1/16 474JATP	J24185474		1-	A	E4
R 1460	CHIP RES.	470k	1/16W	5%	RMC1/16 474JATP	J24185474		1-	A	E4
R 1462	CHIP RES.	47	1/16W	5%	RMC1/16 470JATP	J24185470		1-	A	D5
R 1463	CHIP RES.	470k	1/16W	5%	RMC1/16 474JATP	J24185474		1-	A	E4
R 1464	CHIP RES.	470k	1/16W	5%	RMC1/16 474JATP	J24185474		1-	A	E4
R 1465	CHIP RES.	220k	1/16W	5%	RMC1/16 224JATP	J24185224		1-	A	E4
R 1466	CHIP RES.	1k	1/16W	1%	RMC1/16 102FTP	J24183102		1-	A	E4
R 1467	CHIP RES.	1k	1/16W	1%	RMC1/16 102FTP	J24183102		1-	A	E4
R 1468	CHIP RES.	4.7k	1/16W	5%	RMC1/16 472JATP	J24185472		1-	A	D5
R 1469	CHIP RES.	47	1/16W	5%	RMC1/16 470JATP	J24185470		1-	A	E4
R 1470	CHIP RES.	3.3k	1/16W	5%	RMC1/16 332JATP	J24185332		1-	A	D5
R 1471	CHIP RES.	390	1/16W	1%	RMC1/16 391FTP	J24183391		1-	B	c1
R 1473	CHIP RES.	47k	1/16W	5%	RMC1/16 473JATP	J24185473		1-	B	c2
R 1474	CHIP RES.	390	1/16W	1%	RMC1/16 391FTP	J24183391		1-	B	c2
R 1476	CHIP RES.	10	1/4W	5%	RMC1/4 100JATP	J24245100		1-	B	d1
R 1477	CHIP RES.	200	1/16W	1%	RMC1/16 201FTP	J24183201		1-	B	d3
R 1478	CHIP RES.	3.3k	1/16W	5%	RMC1/16 332JATP	J24185332		1-	B	e2
R 1479	CHIP RES.	3.3k	1/16W	5%	RMC1/16 332JATP	J24185332		1-	B	e2
R 1481	CHIP RES.	10k	1/16W	5%	RMC1/16 103JATP	J24185103		1-	B	e2
R 1482	CHIP RES.	6.8k	1/16W	5%	RMC1/16 682JATP	J24185682		1-	B	d3
R 1483	CHIP RES.	470	1/16W	5%	RMC1/16 471JATP	J24185471		1-	B	e1
R 1484	CHIP RES.	47k	1/16W	5%	RMC1/16S 473JTH	J24189045		1-	B	e1
R 1485	CHIP RES.	10k	1/16W	5%	RMC1/16 103JATP	J24185103		1-	B	e1
R 1486	CHIP RES.	100	1/16W	5%	RMC1/16S 101JTH	J24189013		1-	B	e1
R 1487	CHIP RES.	10k	1/16W	5%	RMC1/16 103JATP	J24185103		1-	B	e1
R 1488	CHIP RES.	22k	1/16W	5%	RMC1/16 223JATP	J24185223		1-	B	d4
R 1489	CHIP RES.	22k	1/16W	5%	RMC1/16 223JATP	J24185223		1-	B	d4
R 1490	CHIP RES.	100k	1/16W	5%	RMC1/16 104JATP	J24185104		1-	B	d4
R 1491	CHIP RES.	100k	1/16W	5%	RMC1/16 104JATP	J24185104		1-	B	d4
R 1492	CHIP RES.	220k	1/16W	5%	RMC1/16 224JATP	J24185224		1-	B	d4
R 1493	CHIP RES.	100k	1/16W	5%	RMC1/16 104JATP	J24185104		1-	B	d4
R 1494	CHIP RES.	47	1/16W	5%	RMC1/16 470JATP	J24185470		1-	A	E4
R 1495	CHIP RES.	100k	1/16W	5%	RMC1/16 104JATP	J24185104		1-	A	E4
R 1496	CHIP RES.	470	1/16W	5%	RMC1/16 471JATP	J24185471		1-	A	E4
R 1497	CHIP RES.	470	1/16W	5%	RMC1/16 471JATP	J24185471		1-	A	E4
R 1498	CHIP RES.	470	1/16W	5%	RMC1/16 471JATP	J24185471		1-	A	E4
R 1499	CHIP RES.	4.7k	1/16W	5%	RMC1/16 472JATP	J24185472		1-	A	E4
R 1500	CHIP RES.	0	1/16W	5%	RMC1/16 000JATP	J24185000		1-	B	a5
R 1501	CHIP RES.	0	1/16W	5%	RMC1/16 000JATP	J24185000		1-	B	a5
R 1502	CHIP RES.	1k	1/16W	5%	RMC1/16 102JATP	J24185102		1-	A	E4
R 1503	CHIP RES.	10k	1/16W	5%	RMC1/16 103JATP	J24185103		1-	A	E4
R 1504	CHIP RES.	200	1/16W	1%	RMC1/16 201FTP	J24183201		1-	B	d3
R 1505	CHIP RES.	100	1/16W	5%	RMC1/16 101JATP	J24185101		1-	B	d3
R 1506	CHIP RES.	100	1/16W	5%	RMC1/16 101JATP	J24185101		1-	B	d3
R 1507	CHIP RES.	100	1/16W	5%	RMC1/16 101JATP	J24185101		1-	B	d3
R 1508	CHIP RES.	100k	1/16W	5%	RMC1/16 104JATP	J24185104		1-	B	d3
R 1509	CHIP RES.	3.3k	1/16W	5%	RMC1/16 332JATP	J24185332		1-	B	d3
R 1510	CHIP RES.	4.7k	1/16W	5%	RMC1/16 472JATP	J24185472		1-	B	d3
R 1511	CHIP RES.	47	1/16W	5%	RMC1/16 470JATP	J24185470		1-	B	d3
R 1512	CHIP RES.	47k	1/16W	5%	RMC1/16 473JATP	J24185473		1-	B	d1
R 1513	CHIP RES.	100	1/16W	5%	RMC1/16 101JATP	J24185101		1-	B	d1
R 1514	CHIP RES.	68k	1/16W	1%	RMC1/16 683FTP	J24183683		1-	B	d1
R 1515	CHIP RES.	100k	1/16W	1%	RMC1/16 104FTP	J24183104		1-	B	d1
R 1516	CHIP RES.	4.7k	1/16W	1%	RMC1/16 472FTP	J24183472		1-	B	d1
R 1517	CHIP RES.	10k	1/16W	5%	RMC1/16 103JATP	J24185103		1-	B	d3
R 1518	CHIP RES.	10k	1/16W	5%	RMC1/16 103JATP	J24185103		1-	B	c3
R 1518	CHIP RES.	0	1/16W	5%	RMC1/16 000JATP	J24185000		6-	B	c3
R 1519	CHIP RES.	100k	1/16W	5%	RMC1/16 104JATP	J24185104		1-	B	c3
R 1520	CHIP RES.	68k	1/16W	1%	RMC1/16 683FTP	J24183683		1-	B	e4
R 1521	CHIP RES.	15k	1/16W	1%	RMC1/16 153FTP	J24183153		1-	B	d3
R 1522	CHIP RES.	10k	1/16W	5%	RMC1/16 103JATP	J24185103		1-	B	d4
R 1523	CHIP RES.	47	1/16W	5%	RMC1/16 470JATP	J24185470		1-	A	E4
R 1524	CHIP RES.	33k	1/16W	5%	RMC1/16 333JATP	J24185333		1-	A	E3

REF	DESCRIPTION	VALUE	V/W	TOL.	MFR'S DESIG	YAESU P/N	VERS.	LOT	SIDE	LAY ADR
R 1525	CHIP RES.	4.7k	1/16W	5%	RMC1/16 472JATP	J24185472		1-	A	E1
R 1526	CHIP RES.	470k	1/16W	5%	RMC1/16 474JATP	J24185474		1-	A	E4
R 1527	CHIP RES.	33k	1/16W	5%	RMC1/16 333JATP	J24185333		1-	A	E3
R 1528	CHIP RES.	33k	1/16W	5%	RMC1/16 333JATP	J24185333		1-	A	E3
R 1529	CHIP RES.	15k	1/16W	5%	RMC1/16 153JATP	J24185153		1-	A	E3
R 1530	CHIP RES.	1k	1/16W	5%	RMC1/16 102JATP	J24185102		1-	A	E1
R 1531	CHIP RES.	47	1/16W	5%	RMC1/16 470JATP	J24185470		1-	A	B1
R 1532	CHIP RES.	10k	1/16W	5%	RMC1/16 103JATP	J24185103		1-	A	B1
R 1533	CHIP RES.	390k	1/16W	5%	RMC1/16 394JATP	J24185394		1-	A	B1
R 1534	CHIP RES.	1k	1/16W	5%	RMC1/16 102JATP	J24185102		1-	B	a4
R 1535	CHIP RES.	220	1/16W	5%	RMC1/16 221JATP	J24185221		1-	B	a4
R 1536	CHIP RES.	1k	1/16W	5%	RMC1/16 102JATP	J24185102		1-	B	a4
R 1537	CHIP RES.	1k	1/16W	5%	RMC1/16 102JATP	J24185102		1-	B	a4
R 1538	CHIP RES.	4.7k	1/16W	5%	RMC1/16 472JATP	J24185472		1-	A	E4
R 1539	CHIP RES.	220	1/16W	5%	RMC1/16 221JATP	J24185221		1-	B	a4
R 1540	CHIP RES.	2.2k	1/16W	5%	RMC1/16 222JATP	J24185222		1-	B	e3
R 1541	CHIP RES.	6.8k	1/16W	5%	RMC1/16 682JATP	J24185682		1-	B	e3
R 1543	CHIP RES.	220	1/16W	5%	RMC1/16 221JATP	J24185221		1-	B	e3
R 1544	CHIP RES.	100	1/16W	5%	RMC1/16 101JATP	J24185101		1-	B	e3
R 1545	CHIP RES.	10	1/16W	5%	RMC1/16 100JATP	J24185100		1-	B	e3
R 1546	CHIP RES.	4.7	1/16W	5%	RMC1/16 4R7JATP	J24185479		1-	B	e3
R 1547	CHIP RES.	680	1/16W	5%	RMC1/16 681JATP	J24185681		1-	B	d3
R 1548	CHIP RES.	33k	1/16W	5%	RMC1/16 333JATP	J24185333		1-	B	d3
R 1549	CHIP RES.	33	1/16W	5%	RMC1/16 330JATP	J24185330		1-	B	d3
R 1550	CHIP RES.	6.8k	1/16W	1%	RMC1/16 682FTP	J24183682		1-	B	d1
R 1551	CHIP RES.	10k	1/16W	1%	RMC1/16 103FTP	J24183103		1-	B	d1
R 1552	CHIP RES.	4.7k	1/16W	5%	RMC1/16 472JATP	J24185472		1-	B	e2
R 1553	CHIP RES.	680k	1/16W	5%	RMC1/16 684JATP	J24185684		1-	B	e2
R 1554	CHIP RES.	100	1/16W	5%	RMC1/16 101JATP	J24185101		1-	B	e2
R 1555	CHIP RES.	4.7k	1/16W	5%	RMC1/16 472JATP	J24185472		1-	B	e2
R 1556	CHIP RES.	6.8k	1/16W	5%	RMC1/16 682JATP	J24185682		1-	B	d3
R 1557	CHIP RES.	2.7k	1/16W	1%	RMC1/16 272FTP	J24183272		1-	B	e4
R 1558	CHIP RES.	100k	1/16W	5%	RMC1/16 104JATP	J24185104		1-	B	c3
R 1559	CHIP RES.	68k	1/16W	5%	RMC1/16 683JATP	J24185683		1-	B	d4
R 1559	CHIP RES.	10k	1/16W	5%	RMC1/16 103JATP	J24185103		6-	B	d4
R 1560	CHIP RES.	47	1/16W	5%	RMC1/16 470JATP	J24185470		1-	B	d4
R 1561	CHIP RES.	4.7k	1/16W	1%	RMC1/16 472FTP	J24183472		1-	B	e4
R 1562	CHIP RES.	22k	1/16W	1%	RMC1/16 223FTP	J24183223		1-	B	e4
R 1563	CHIP RES.	6.8k	1/16W	1%	RMC1/16 682FTP	J24183682		1-	B	d4
R 1564	CHIP RES.	10k	1/16W	1%	RMC1/16 103FTP	J24183103		1-	B	e4
R 1565	CHIP RES.	1k	1/16W	5%	RMC1/16 102JATP	J24185102		1-	A	E4
R 1566	CHIP RES.	1k	1/16W	5%	RMC1/16 102JATP	J24185102		1-	A	E4
R 1567	CHIP RES.	0	1/10W	5%	RMC1/10T 000J	J24205000		1-	B	a1
R 1568	CHIP RES.	0	1/10W	5%	RMC1/10T 000J	J24205000		1-	B	a1
R 1569	CHIP RES.	3.3k	1/16W	5%	RMC1/16 332JATP	J24185332		1-	A	B1
R 1571	CHIP RES.	100k	1/16W	5%	RMC1/16 104JATP	J24185104		1-	A	B1
R 1572	CHIP RES.	33k	1/16W	5%	RMC1/16 333JATP	J24185333		1-	A	B1
R 1573	CHIP RES.	680	1/16W	5%	RMC1/16 681JATP	J24185681		1-	A	B1
R 1574	CHIP RES.	10k	1/16W	5%	RMC1/16 103JATP	J24185103		1-	A	B1
R 1575	CHIP RES.	3.3k	1/16W	5%	RMC1/16 332JATP	J24185332		1-	A	E4
R 1576	CHIP RES.	100	1/16W	5%	RMC1/16 101JATP	J24185101		1-	A	E4
R 1577	CHIP RES.	100k	1/16W	5%	RMC1/16 104JATP	J24185104		1-	A	F3
R 1578	CHIP RES.	4.7k	1/16W	5%	RMC1/16 472JATP	J24185472		1-	A	E4
R 1579	CHIP RES.	10k	1/16W	5%	RMC1/16 103JATP	J24185103		1-	A	E4
R 1580	CHIP RES.	4.7k	1/16W	1%	RMC1/16 472FTP	J24183472		1-	A	E4
R 1581	CHIP RES.	1k	1/16W	1%	RMC1/16 102FTP	J24183102		1-	A	E4
R 1582	CHIP RES.	4.7	1/16W	5%	RMC1/16 4R7JATP	J24185479		1-	A	B3
R 1583	CHIP RES.	4.7	1/16W	5%	RMC1/16 4R7JATP	J24185479		1-	A	B3
R 1584	CHIP RES.	10	1/16W	5%	RMC1/16 100JATP	J24185100		1-	B	e3
R 1585	CHIP RES.	270	1/16W	5%	RMC1/16 271JATP	J24185271		1-	A	B3
R 1586	CHIP RES.	220	1/16W	5%	RMC1/16 221JATP	J24185221		1-	B	e3
R 1587	CHIP RES.	470	1/16W	5%	RMC1/16 471JATP	J24185471		1-	B	e3
R 1588	CHIP RES.	470	1/16W	5%	RMC1/16 471JATP	J24185471		1-	B	e3
R 1590	CHIP RES.	47	1/16W	5%	RMC1/16 470JATP	J24185470		1-	B	e3
R 1591	CHIP RES.	470	1/16W	5%	RMC1/16 471JATP	J24185471		1-	B	e3
R 1593	CHIP RES.	10k	1/16W	5%	RMC1/16 103JATP	J24185103		1-	B	e4
R 1594	CHIP RES.	10k	1/16W	5%	RMC1/16 103JATP	J24185103		1-	B	e3
R 1595	CHIP RES.	10k	1/16W	5%	RMC1/16 103JATP	J24185103		1-	B	e3
R 1596	CHIP RES.	6.8k	1/16W	5%	RMC1/16 682JATP	J24185682		1-	B	e2
R 1597	CHIP RES.	22k	1/16W	5%	RMC1/16 223JATP	J24185223		1-	B	e3
R 1598	CHIP RES.	3.3k	1/16W	1%	RMC1/16 332FTP	J24183332		1-	B	d4
R 1599	CHIP RES.	10k	1/16W	5%	RMC1/16 103JATP	J24185103		1-	B	d4
R 1600	CHIP RES.	330k	1/16W	1%	RMC1/16 334FTP	J24183334		1-	B	e4
R 1601	CHIP RES.	150k	1/16W	1%	RMC1/16 154FTP	J24183154		1-	B	e4
R 1602	CHIP RES.	1k	1/16W	5%	RMC1/16 102JATP	J24185102		1-	B	e4

REF	DESCRIPTION	VALUE	V/W	TOL.	MFR'S DESIG	YAESU P/N	VERS.	LOT	SIDE	LAY ADR
R 1603	CHIP RES.	470	1W	5%	RMC1 471JTE	J24305471		1-	A	E1
R 1604	CHIP RES.	10k	1/16W	5%	RMC1/16 103JATP	J24185103		1-	B	a1
R 1605	CHIP RES.	470	1/16W	5%	RMC1/16 471JATP	J24185471		1-	B	a1
R 1606	CHIP RES.	47	1/16W	5%	RMC1/16 470JATP	J24185470		1-	B	a2
R 1610	CHIP RES.	10k	1/16W	5%	RMC1/16 103JATP	J24185103		1-	B	a2
R 1611	CHIP RES.	3.3k	1/16W	5%	RMC1/16 332JATP	J24185332		1-	B	a2
R 1612	CHIP RES.	330	1/4W	5%	RMC1/4 331JATP	J24245331		1-	B	a2
R 1613	CHIP RES.	10k	1/16W	5%	RMC1/16 103JATP	J24185103		1-	B	a2
R 1614	CHIP RES.	100k	1/16W	5%	RMC1/16 104JATP	J24185104		1-	A	B1
R 1615	CHIP RES.	22k	1/16W	5%	RMC1/16 223JATP	J24185223		1-	A	B1
R 1616	CHIP RES.	22k	1/16W	5%	RMC1/16 223JATP	J24185223		1-	A	B1
R 1619	CHIP RES.	0	1/16W	5%	RMC1/16 000JATP	J24185000		1-	A	B1
R 1620	CHIP RES.	2.2k	1/16W	5%	RMC1/16 222JATP	J24185222		1-	A	B1
R 1621	CHIP RES.	220	1/16W	5%	RMC1/16 221JATP	J24185221		1-	A	B1
R 1623	CHIP RES.	47	1/16W	5%	RMC1/16 470JATP	J24185470		1-	B	a2
R 1624	CHIP RES.	4.7k	1/16W	5%	RMC1/16 472JATP	J24185472		1-	B	a2
R 1625	CHIP RES.	4.7k	1/16W	5%	RMC1/16 472JATP	J24185472		1-	B	a2
R 1626	CHIP RES.	470	1/16W	5%	RMC1/16 471JATP	J24185471		1-	A	A5
R 1627	CHIP RES.	470	1/16W	5%	RMC1/16 471JATP	J24185471		1-	A	A5
R 1628	CHIP RES.	4.7k	1/16W	5%	RMC1/16 472JATP	J24185472		1-	B	e4
R 1628	CHIP RES.	10k	1/16W	5%	RMC1/16 103JATP	J24185103		10-	B	e4
R 1629	CHIP RES.	47k	1/16W	5%	RMC1/16 473JATP	J24185473		1-	B	e4
R 1630	CHIP RES.	8.2k	1/16W	5%	RMC1/16 822JATP	J24185822		1-	B	e4
R 1631	CHIP RES.	47	1/16W	5%	RMC1/16 470JATP	J24185470		1-	B	e4
R 1632	CHIP RES.	10k	1/16W	5%	RMC1/16 103JATP	J24185103		1-	B	e4
R 1633	CHIP RES.	33k	1/16W	5%	RMC1/16 333JATP	J24185333		1-	B	e4
R 1634	CHIP RES.	10k	1/16W	1%	RMC1/16 103FTP	J24183103		1-	B	e4
R 1636	CHIP RES.	10k	1/16W	1%	RMC1/16 103FTP	J24183103		1-	B	e4
R 1637	CHIP RES.	1k	1/16W	5%	RMC1/16 102JATP	J24185102		1-	B	e4
R 1638	CHIP RES.	10k	1/16W	5%	RMC1/16 103JATP	J24185103		1-	B	e4
R 1639	CHIP RES.	47	1/16W	5%	RMC1/16 470JATP	J24185470		1-	B	d4
R 1641	CHIP RES.	1k	1/16W	5%	RMC1/16 102JATP	J24185102		1-	B	e4
R 1642	CHIP RES.	47	1/16W	5%	RMC1/16 470JATP	J24185470		1-	B	b2
R 1643	CHIP RES.	3.3	1W	5%	RMC1 3R3JTE	J24305339		1-	B	a2
R 1644	CHIP RES.	10k	1/16W	5%	RMC1/16 103JATP	J24185103		1-	B	a2
R 1645	CHIP RES.	470	1/16W	5%	RMC1/16 471JATP	J24185471		1-	A	A5
R 1646	CHIP RES.	470	1/16W	5%	RMC1/16 471JATP	J24185471		1-	A	A5
R 1647	CHIP RES.	10k	1/16W	5%	RMC1/16S 103JTH	J24189037		1-	A	C4
R 1648	CHIP RES.	4.7k	1/16W	5%	RMC1/16S 472JTH	J24189033		1-	A	C4
R 1649	CHIP RES.	4.7k	1/16W	5%	RMC1/16S 472JTH	J24189033		1-	A	C4
R 1650	CHIP RES.	47k	1/16W	5%	RMC1/16S 473JTH	J24189045		1-	A	C4
R 1651	CHIP RES.	47k	1/16W	5%	RMC1/16S 473JTH	J24189045		1-	A	C4
R 1652	CHIP RES.	47k	1/16W	5%	RMC1/16S 473JTH	J24189045		1-	A	C4
R 1653	CHIP RES.	47k	1/16W	5%	RMC1/16S 473JTH	J24189045		1-	A	C5
R 1654	CHIP RES.	47k	1/16W	5%	RMC1/16S 473JTH	J24189045		1-	A	C5
R 1655	CHIP RES.	47k	1/16W	5%	RMC1/16S 473JTH	J24189045		1-	A	C5
R 1656	CHIP RES.	47k	1/16W	5%	RMC1/16S 473JTH	J24189045		1-	A	C5
R 1657	CHIP RES.	47k	1/16W	5%	RMC1/16S 473JTH	J24189045		1-	A	C5
R 1658	CHIP RES.	2.2k	1/16W	5%	RMC1/16 222JATP	J24185222		1-	A	D1
R 1659	CHIP RES.	3.3k	1/16W	5%	RMC1/16 332JATP	J24185332		1-	B	a4
R 1660	CHIP RES.	39k	1/16W	5%	RMC1/16 393JATP	J24185393		1-	B	a4
R 1660	CHIP RES.	3.9k	1/16W	5%	RMC1/16 392JATP	J24185392		6-	B	a4
R 1661	CHIP RES.	39k	1/16W	5%	RMC1/16 393JATP	J24185393		1-	B	a4
R 1661	CHIP RES.	3.9k	1/16W	5%	RMC1/16 392JATP	J24185392		6-	B	a4
R 1662	CHIP RES.	10k	1/16W	5%	RMC1/16 103JATP	J24185103		1-	B	a4
R 1663	CHIP RES.	27k	1/16W	5%	RMC1/16 273JATP	J24185273		1-	B	a3
R 1663	CHIP RES.	2.7k	1/16W	5%	RMC1/16 272JATP	J24185272		6-	B	a3
R 1664	CHIP RES.	27k	1/16W	5%	RMC1/16 273JATP	J24185273		1-	B	b4
R 1664	CHIP RES.	2.7k	1/16W	5%	RMC1/16 272JATP	J24185272		6-	B	b4
R 1666	CHIP RES.	10k	1/16W	5%	RMC1/16 103JATP	J24185103		1-	B	b4
R 1667	CHIP RES.	47	1/16W	5%	RMC1/16 470JATP	J24185470		1-	B	b3
R 1668	CHIP RES.	220k	1/16W	5%	RMC1/16 224JATP	J24185224		1-	B	a4
R 1669	CHIP RES.	220k	1/16W	5%	RMC1/16 224JATP	J24185224		1-	B	a4
R 1670	CHIP RES.	82k	1/16W	5%	RMC1/16 823JATP	J24185823		1-	A	C2
R 1671	CHIP RES.	220	1/10W	5%	RMC1/10T 221J	J24205221		1-	B	b2
R 1672	CHIP RES.	47	1/16W	5%	RMC1/16 470JATP	J24185470		1-	B	a2
R 1673	CHIP RES.	47k	1/16W	5%	RMC1/16 473JATP	J24185473		1-	B	c3
R 1674	CHIP RES.	47k	1/16W	5%	RMC1/16 473JATP	J24185473		1-	B	d2
R 1675	CHIP RES.	47k	1/16W	5%	RMC1/16 473JATP	J24185473		1-	B	d3
R 1676	CHIP RES.	47k	1/16W	5%	RMC1/16 473JATP	J24185473		1-	B	c2
R 1677	CHIP RES.	4.7k	1/16W	5%	RMC1/16 472JATP	J24185472		1-	A	B5
R 1678	CHIP RES.	0	1/16W	5%	RMC1/16 000JATP	J24185000		1-	B	c4
R 1679	CHIP RES.	47	1W	5%	RMC1 470JTE	J24305470		1-	A	D3
R 1685	CHIP RES.	0	1/16W	5%	RMC1/16 000JATP	J24185000		1-	A	B2
R 1691	CHIP RES.	0	1/16W	5%	RMC1/16 000JATP	J24185000		1-	A	D1

REF	DESCRIPTION	VALUE	V/W	TOL.	MFR'S DESIG	YAESU P/N	VERS.	LOT	SIDE	LAY ADR
R 1693	CHIP RES.	47	1/16W	5%	RMC1/16 470JATP	J24185470		1-	A	D1
R 1694	CHIP RES.	100	1/16W	5%	RMC1/16 101JATP	J24185101		1-	A	D1
R 1694	CHIP RES.	47	1/16W	5%	RMC1/16 470JATP	J24185470		4-	A	D1
R 1694	CHIP RES.	47	1/16W	5%	RMC1/16 470JATP	J24185470		6-	A	D1
R 1696	CHIP RES.	1k	1/16W	5%	RMC1/16 102JATP	J24185102		1-	A	D1
R 1697	CHIP RES.	330	1/16W	5%	RMC1/16 331JATP	J24185331		1-	A	D1
R 1698	CHIP RES.	47	1/16W	5%	RMC1/16 470JATP	J24185470		1-	A	D1
R 1699	CHIP RES.	10	1/16W	5%	RMC1/16 100JATP	J24185100		1-	A	D1
R 1700	CHIP RES.	220	1/16W	5%	RMC1/16 221JATP	J24185221		1-	A	E1
R 1701	CHIP RES.	68	1/16W	5%	RMC1/16 680JATP	J24185680		1-	A	E1
R 1702	CHIP RES.	10k	1/16W	5%	RMC1/16 103JATP	J24185103		1-	B	b4
R 1703	CHIP RES.	100	1/16W	5%	RMC1/16 101JATP	J24185101		1-	B	c5
R 1704	CHIP RES.	2.2k	1/16W	5%	RMC1/16 222JATP	J24185222		4-	A	A2
R 1705	CHIP RES.	1.8k	1/16W	5%	RMC1/16 182JATP	J24185182		1-	A	A2
R 1705	CHIP RES.	470	1/16W	5%	RMC1/16 471JATP	J24185471		4-	A	A2
R 1706	CHIP RES.	18	1/16W	5%	RMC1/16S 180JTH	J24189004		1-	A	C2
R 1707	CHIP RES.	330	1/16W	5%	RMC1/16S 331JTH	J24189019		1-	A	C2
R 1708	CHIP RES.	330	1/16W	5%	RMC1/16S 331JTH	J24189019		1-	A	C2
R 1709	CHIP RES.	10	1/16W	5%	RMC1/16 100JATP	J24185100		1-	B	e4
R 1712	CHIP RES.	0	1/10W	5%	RMC1/10T 000J	J24205000		1-3		
R 1713	CHIP RES.	150	1/8W	5%	RMC1/8T 151J	J24215151		1-	A	B3
R 1713	CHIP RES.	150	1/16W	5%	RMC1/16 151JATP	J24185151		4-	A	B3
R 1714	CHIP RES.	4.7k	1/16W	5%	RMC1/16 472JATP	J24185472		7-	A	A3
R 1715	CHIP RES.	4.7k	1/16W	5%	RMC1/16 472JATP	J24185472		7-	A	A3
R 1716	CHIP RES.	33	1/16W	5%	RMC1/16 330JATP	J24185330		7-	A	B3
R 1717	CHIP RES.	33	1/16W	5%	RMC1/16 330JATP	J24185330		7-	A	B3
R 1718	CHIP RES.	470	1/16W	5%	RMC1/16 471JATP	J24185471		7-	A	B3
R 1719	CHIP RES.	1k	1/16W	5%	RMC1/16 102JATP	J24185102		7-	A	D3
R 1720	CHIP RES.	47k	1/16W	5%	RMC1/16 473JATP	J24185473		7-	A	D3
R 1722	CHIP RES.	4.7k	1/16W	5%	RMC1/16 472JATP	J24185472		7-	A	E3
R 1723	CHIP RES.	470k	1/16W	5%	RMC1/16 474JATP	J24185474		7-	B	b3
R 1725	CHIP RES.	4.7k	1/16W	5%	RMC1/16 472JATP	J24185472		7-	B	b3
R 1726	CHIP RES.	1k	1/16W	5%	RMC1/16 102JATP	J24185102		7-	A	A4
R 1727	CHIP RES.	470	1/16W	5%	RMC1/16 471JATP	J24185471		7-	B	b3
R 1728	CHIP RES.	6.8k	1/16W	5%	RMC1/16 682JATP	J24185682		7-	A	E3
R 1729	CHIP RES.	4.7k	1/16W	5%	RMC1/16 472JATP	J24185472		7-	B	b1
R 1729	CHIP RES.	1k	1/16W	5%	RMC1/16 102JATP	J24185102		11-	B	b1
R 1730	CHIP RES.	4.7k	1/16W	5%	RMC1/16 472JATP	J24185472		7-	B	c1
R 1730	CHIP RES.	47k	1/16W	5%	RMC1/16 473JATP	J24185473		11-	B	c1
R 1731	CHIP RES.	0	1/16W	5%	RMC1/16S JPTH	J24189070		7-	B	b1
R 1731	CHIP RES.	22k	1/16W	5%	RMC1/16 223JATP	J24185223		11-	B	b1
R 1732	CHIP RES.	100	1/16W	5%	RMC1/16 101JATP	J24185101		7-9	B	b1
R 1732	CHIP RES.	6.8k	1/16W	5%	RMC1/16 682JATP	J24185682		11-	B	b1
R 1733	CHIP RES.	2.2k	1/16W	5%	RMC1/16 222JATP	J24185222		11-	B	b1
RB1001	BLOCK RES.				RAC104D332JCTH	J42900041		1-	A	B5
RB1002	BLOCK RES.				RAC104D332JCTH	J42900041		1-	A	B5
RB1003	BLOCK RES.				RAC104D103JCTP	J42900024		1-	A	C5
RB1004	BLOCK RES.				RAC104D332JCTH	J42900041		1-	A	C5
RB1007	BLOCK RES.				RAC104D103JCTP	J42900024		1-	A	C4
RB1008	BLOCK RES.				RAC104D103JCTP	J42900024		1-	A	C4
RB1009	BLOCK RES.				RAC104D103JCTP	J42900024		1-	A	C4
RL1001	RELAY		DC12V		FTR-B3GA012Z-B10 DC12V	M1190201		1-	A	E3
RL1002	RELAY		DC12V		FTR-B4SA012Z-B05	M1190209		1-	A	E2
RL1003	RELAY		DC12V		FTR-B4SA012Z-B05	M1190209		1-	A	E2
RL1004	RELAY		DC12V		FTR-B4SA012Z-B05	M1190209		1-	A	E2
S 1002	SLIDE SWITCH				SSSS213202	N6090120		1-	A	F5
T 1001	BALUN TRANSFOMER$				#458PT-1565	L0190273		1-	A	D1
T 1002	BALUN TRANSFOMER$				#458PT-1565	L0190273		1-	A	E1
T 1004	BALUN TRANSFOMER$				120491012A	L0023160		1-	A	D1
T 1005	COIL 05RF				M5-N1 R12-T635Y	L0022651		1-	A	D1
T 1006	BALUN TRANSFOMER$				#458PT-1565	L0190273		1-	A	C2
T 1007	BALUN TRANSFOMER$				#458PT-1565	L0190273		1-	A	C2
T 1008	BALUN TRANSFOMER$				#458PT-1917	L0023156		1-	A	B1
T 1009	BALUN TRANSFOMER$				#458PT-1586	L0190276		1-	A	A2
T 1010	BALUN TRANSFOMER$				#458PT-1917	L0023156		1-	A	B2
T 1011	COIL 05RF				74.62M 010812302	L0022781		1-	A	B2
T 1012	COIL 05RF				M5-N1 R12-T661Y	L0022674		1-	A	B2
T 1013	COIL 05RF				M5-N1 R12-T661Y	L0022674		1-	A	B2
T 1014	COIL 05RF				M5-N1 R12-T661Y	L0022674		1-	A	B2
T 1015	BALUN TRANSFOMER$				#617DS-1710	L0190275		1-	A	B1
T 1016	COIL 05RF				M5-N1 R12-T661Y	L0022674		1-	A	B2
T 1017	BALUN TRANSFOMER$				#458PT-1917	L0023156		1-	A	C1
T 1018	BALUN TRANSFOMER$				#458PT-1586	L0190276		1-	A	C1
T 1020	BALUN TRANSFOMER$				#458PT-1917	L0023156		1-	A	C1
T 1021	BALUN TRANSFOMER$				080812771A	L0023078		1-	A	A3

REF	DESCRIPTION	VALUE	V/W	TOL.	MFR'S DESIG	YAESU P/N	VERS.	LOT	SIDE	LAY ADR
T 1022	BALUN TRANSFOMERS				080812771A	L0023078		1-	A	A3
T 1023	COIL 05RF				K5-N1 R-12W587B	L0022654		1-	A	B3
T 1024	BALUN TRANSFOMERS				120491012A	L0023160		1-	A	D1
T 1025	COIL 05RF				M5-N1 R12-T635Y	L0022651		1-	A	D1
TP1005	CHECK TERMINAL				RCTCTE	Q5000103		1-	A	C2
TP1008	CHECK TERMINAL				RCTCTE	Q5000103		1-	A	C2
TP1009	CHECK TERMINAL				RCTCTE	Q5000103		1-	A	C2
TP1016	CHECK TERMINAL				RCTCTE	Q5000103		1-	A	B1
TP1018	CHECK TERMINAL				RCTCTE	Q5000103		1-	A	E1
TP1022	CHECK TERMINAL				RCTCTE	Q5000103		1-	A	B2
TP1041	CHECK TERMINAL				RCTCTE	Q5000103		1-	A	B3
VR1001	POT.	10k			EVM3YSX50B14	J51833103		1-	A	C1
VR1001	POT.	10k			VG039NSNXTB103	J51848103		16-	A	C1
X 1001	XTAL DSX321G	11.1MHz			DSX321G 11.100MHZ	H0103446		1-	A	B5
X 1002	VCTCXO	34.5MHz			DSA321SDN 34.5MHZ	H9501800		1-	B	d3
X 1003	TCXO	69.45MHz			DSV321SV 69.450MHZ	H9501700		1-	B	d1
XF1001	XTAL FILTER				1D69403GQ1 69.450MHZ	H1102489		1-	A	B2
XF1002	XTAL FILTER				1D69412GQ2 69.45MHZ	H1102496		1-	A	B1
	SHIELD CASE				(37x30.5)	RA6079500		1-		
	SHIELD CASE COVER				(37x30.5)	RA1152400		1-		
	SHIELD CASE				(21x40.5)	RA6079300		1-		
	SHIELD CASE COVER				(21x40.5)	RA6079400		1-		
	SHIELD PLATE				(2)	RA6091600		1-		
	BUSTERAID				(12.5X10)	RA6115700		1-		
	BUSTERAID				(12.5X10)	RA6115700		4-10		
	INSULATOR WASHER					RA085830A		1-3		

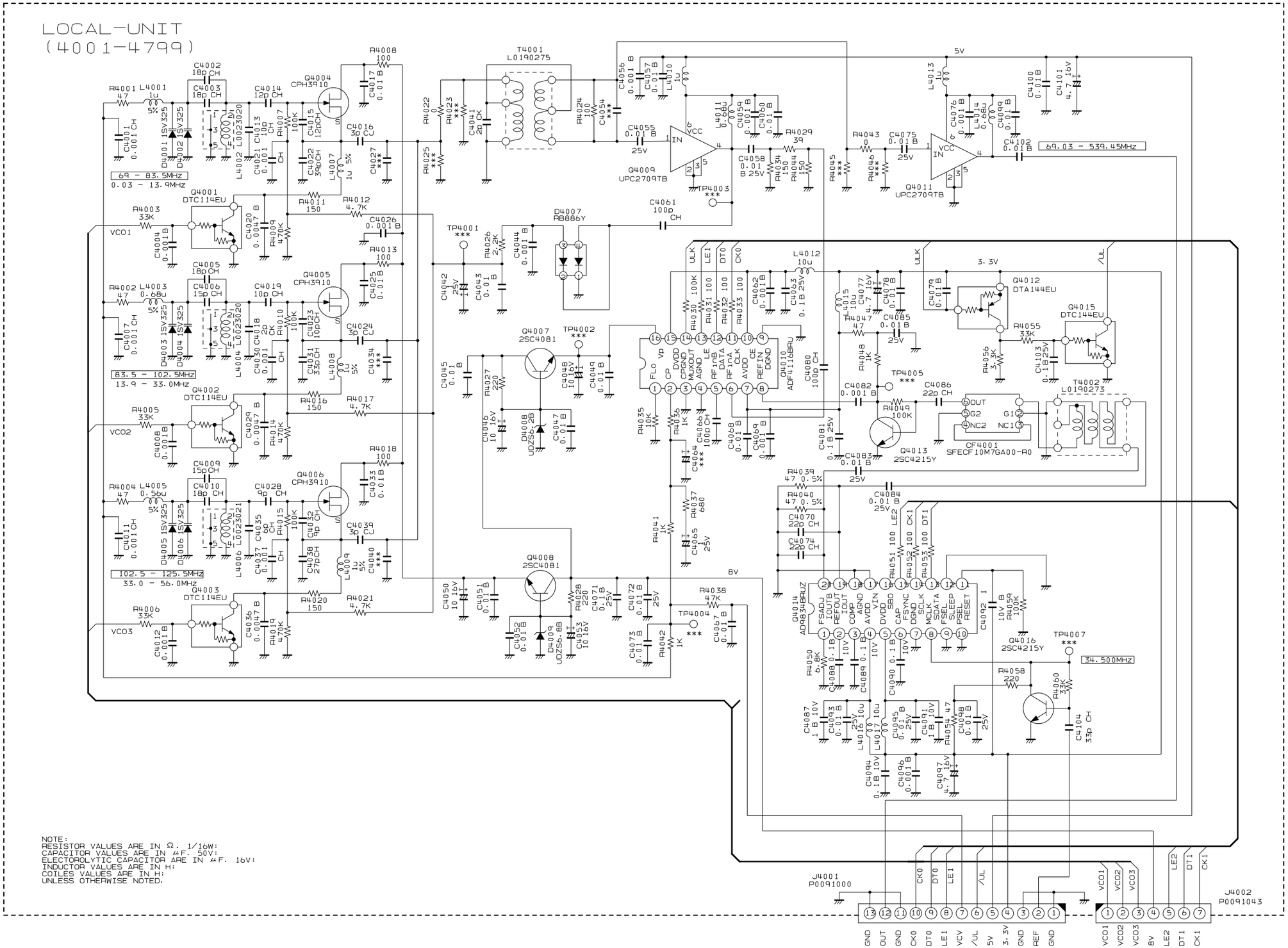

NOTE:
RESISTOR VALUES ARE IN Ω. 1/16W:
CAPACITOR VALUES ARE IN μF. 50V:
ELECTOROLYTIC CAPACITOR ARE IN μF. 16V:
INDUCTOR VALUES ARE IN H:
COILES VALUES ARE IN H:
UNLESS OTHERWISE NOTED.

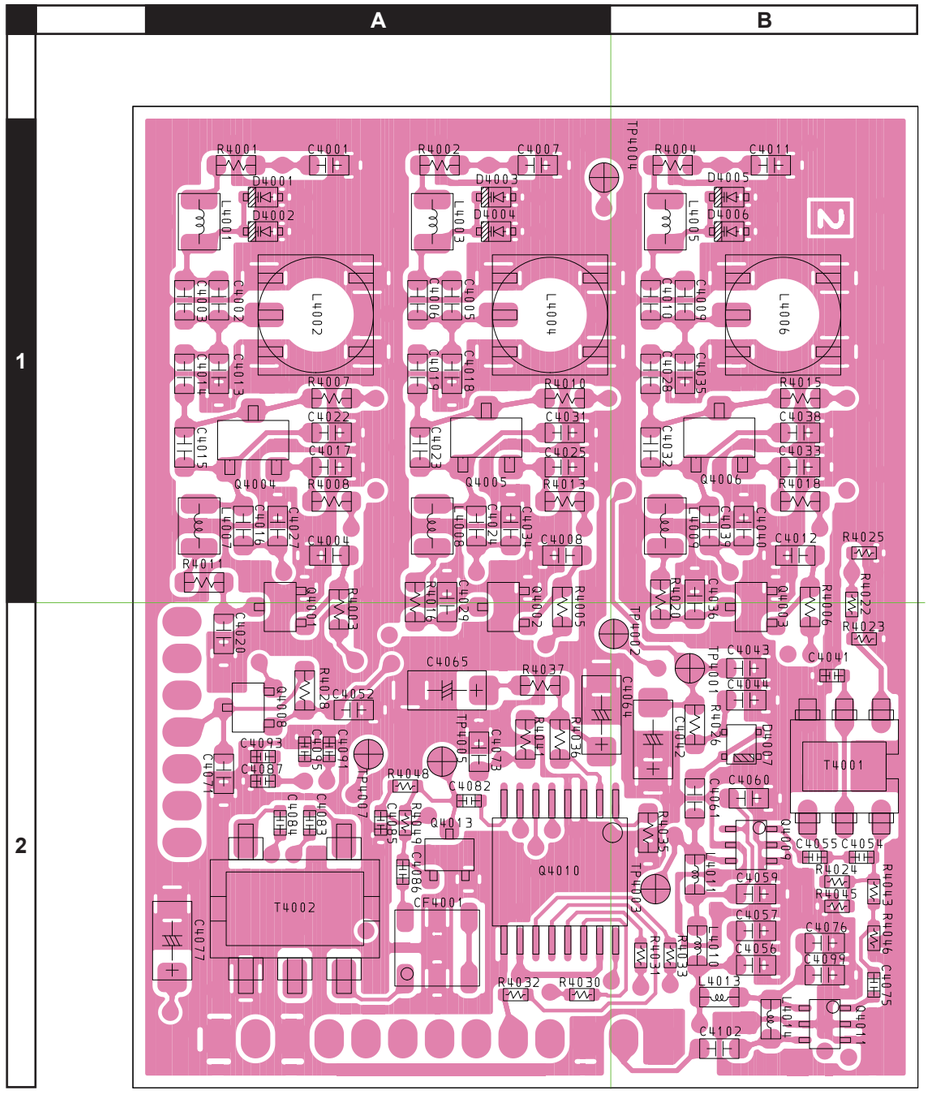
A
B
1
2
T4001
T4002
Q4010
Q4013
Q4005
Q4006
Q4004
CF4001
L4002
L4004
L4006
L4013
L4014
L4015
L4016
L4017
L4018
L4019
L4020
L4021
L4022
L4023
L4024
L4025
L4026
L4027
L4028
L4029
L4030
L4031
L4032
L4033
L4034
L4035
L4036
L4037
L4038
L4039
L4040
L4041
L4042
L4043
L4044
L4045
L4046
L4047
L4048
L4049
L4050
L4051
L4052

REF	DESCRIPTION	VALUE	V/W	TOL.	MFR'S DESIG	YAESU P/N	VERS.	LOT	SIDE	LAY ADR
C 4001	CHIP CAP.	0.001uF	50V	CH	GRM1882C1H102JA01D	K22174275		1-	A	A1
C 4002	CHIP CAP.	18pF	50V	CH	GRM1882C1H180JA01D	K22174217		1-	A	A1
C 4003	CHIP CAP.	15pF	50V	CH	GRM1882C1H150JA01D	K22174215		1-	A	A1
C 4004	CHIP CAP.	0.001uF	50V	B	GRM188B11H102KA01D	K22174821		1-	A	A1
C 4005	CHIP CAP.	15pF	50V	CH	GRM1882C1H150JA01D	K22174215		1-	A	A1
C 4006	CHIP CAP.	15pF	50V	CH	GRM1882C1H150JA01D	K22174215		1-	A	A1
C 4007	CHIP CAP.	0.001uF	50V	CH	GRM1882C1H102JA01D	K22174275		1-	A	A1
C 4008	CHIP CAP.	0.001uF	50V	B	GRM188B11H102KA01D	K22174821		1-	A	A1
C 4009	CHIP CAP.	15pF	50V	CH	GRM1882C1H150JA01D	K22174215		1-	A	B1
C 4009	CHIP CAP.	18pF	50V	CH	GRM1882C1H180JA01D	K22174217		3-	A	B1
C 4010	CHIP CAP.	15pF	50V	CH	GRM1882C1H150JA01D	K22174215		1-	A	B1
C 4010	CHIP CAP.	18pF	50V	CH	GRM1882C1H180JA01D	K22174217		3-	A	B1
C 4011	CHIP CAP.	0.001uF	50V	CH	GRM1882C1H102JA01D	K22174275		1-	A	B1
C 4012	CHIP CAP.	0.001uF	50V	B	GRM188B11H102KA01D	K22174821		1-	A	B1
C 4013	CHIP CAP.	10pF	50V	CH	GRM1882C1H100JA01D	K22174211		1-	A	A1
C 4014	CHIP CAP.	12pF	50V	CH	GRM1882C1H120JA01D	K22174213		1-	A	A1
C 4015	CHIP CAP.	12pF	50V	CH	GRM1882C1H120JA01D	K22174213		1-	A	A1
C 4016	CHIP CAP.	3pF	50V	CJ	GRM1883C1H3R0CA01D	K22174204		1-	A	A1
C 4017	CHIP CAP.	0.01uF	50V	B	GRM188B11H103KA01D	K22174823		1-	A	A1
C 4018	CHIP CAP.	2pF	50V	CK	GRM1884C1H2R0CA01D	K22174203		1-	A	A1
C 4019	CHIP CAP.	10pF	50V	CH	GRM1882C1H100JA01D	K22174211		1-	A	A1
C 4020	CHIP CAP.	0.0047uF	50V	B	GRM188B11H472KA01D	K22174817		1-	A	A2
C 4021	CHIP CAP.	0.001uF	50V	CH	GRM1882C1H102JA01D	K22174275		1-	B	b1
C 4022	CHIP CAP.	39pF	50V	CH	GRM1882C1H390JA01D	K22174225		1-	A	A1
C 4023	CHIP CAP.	10pF	50V	CH	GRM1882C1H100JA01D	K22174211		1-	A	A1
C 4024	CHIP CAP.	3pF	50V	CJ	GRM1883C1H3R0CA01D	K22174204		1-	A	A1
C 4025	CHIP CAP.	0.01uF	50V	B	GRM188B11H103KA01D	K22174823		1-	A	A1
C 4026	CHIP CAP.	0.001uF	50V	B	GRM188B11H102KA01D	K22174821		1-	B	b1
C 4028	CHIP CAP.	9pF	50V	CH	GRM1882C1H9R0CA01D	K22174247		1-	A	B1
C 4029	CHIP CAP.	0.0047uF	50V	B	GRM188B11H472KA01D	K22174817		1-	A	A2
C 4030	CHIP CAP.	0.001uF	50V	CH	GRM1882C1H102JA01D	K22174275		1-	B	a1
C 4031	CHIP CAP.	33pF	50V	CH	GRM1882C1H330JA01D	K22174223		1-	A	A1
C 4032	CHIP CAP.	9pF	50V	CH	GRM1882C1H9R0CA01D	K22174247		1-	A	B1
C 4033	CHIP CAP.	0.01uF	50V	B	GRM188B11H103KA01D	K22174823		1-	A	B1
C 4035	CHIP CAP.	6pF	50V	CH	GRM1882C1H6R0CA01D	K22174244		1-	A	B1
C 4035	CHIP CAP.	5pF	50V	CH	GRM1882C1H5R0CA01D	K22174206		3-	A	B1
C 4036	CHIP CAP.	0.0047uF	50V	B	GRM188B11H472KA01D	K22174817		1-	A	B2
C 4037	CHIP CAP.	0.001uF	50V	CH	GRM1882C1H102JA01D	K22174275		1-	B	a1
C 4038	CHIP CAP.	27pF	50V	CH	GRM1882C1H270JA01D	K22174221		1-	A	B1
C 4039	CHIP CAP.	3pF	50V	CJ	GRM1883C1H3R0CA01D	K22174204		1-	A	B1
C 4041	CHIP CAP.	2pF	50V	CK	GRM1554C1H2R0CA01D	K22178204		1-	A	B2
C 4042	CHIP TA.CAP.	1uF	25V		TMCMA1E105MTRF	K78140013		1-	A	B2
C 4043	CHIP CAP.	0.01uF	50V	B	GRM188B11H103KA01D	K22174823		1-	A	B2
C 4044	CHIP CAP.	0.001uF	50V	B	GRM188B11H102KA01D	K22174821		1-	A	B2
C 4045	CHIP CAP.	0.01uF	50V	B	GRM188B11H103KA01D	K22174823		1-	B	a2
C 4046	CHIP TA.CAP.	10uF	16V		TMCMA1C106MTRF	K78120077		1-	B	a2
C 4047	CHIP CAP.	0.01uF	50V	B	GRM188B11H103KA01D	K22174823		1-	B	a2
C 4048	CHIP TA.CAP.	10uF	16V		TMCMA1C106MTRF	K78120077		1-	B	a2
C 4049	CHIP CAP.	0.01uF	50V	B	GRM188B11H103KA01D	K22174823		1-	B	a2
C 4050	CHIP TA.CAP.	10uF	16V		TMCMA1C106MTRF	K78120077		1-	B	b1
C 4051	CHIP CAP.	0.01uF	50V	B	GRM188B11H103KA01D	K22174823		1-	B	b2
C 4052	CHIP CAP.	0.01uF	50V	B	GRM188B11H103KA01D	K22174823		1-	A	A2
C 4053	CHIP TA.CAP.	10uF	16V		TMCMA1C106MTRF	K78120077		1-	B	a2
C 4055	CHIP CAP.	0.01uF	25V	B	GRM155B11E103KA01D	K22148834		1-	A	B2
C 4056	CHIP CAP.	0.001uF	50V	B	GRM188B11H102KA01D	K22174821		1-	A	B2
C 4057	CHIP CAP.	0.01uF	50V	B	GRM188B11H103KA01D	K22174823		1-	A	B2
C 4058	CHIP CAP.	0.01uF	25V	B	GRM155B11E103KA01D	K22148834		1-	B	a2
C 4059	CHIP CAP.	0.001uF	50V	B	GRM188B11H102KA01D	K22174821		1-	A	B2
C 4060	CHIP CAP.	0.01uF	50V	B	GRM188B11H103KA01D	K22174823		1-	A	B2
C 4061	CHIP CAP.	100pF	50V	CH	GRM1882C1H101JA01D	K22174235		1-	A	B2
C 4062	CHIP CAP.	0.001uF	50V	B	GRM188B11H102KA01D	K22174821		1-	B	a2
C 4063	CHIP CAP.	0.1uF	25V	B	GRM188B11E104KA01D	K22144814		1-	B	a2
C 4065	CHIP TA.CAP.	1uF	25V		TMCMA1E105MTRF	K78140013		1-	A	A2
C 4066	CHIP CAP.	100pF	50V	CH	GRM1882C1H101JA01D	K22174235		1-	B	a2
C 4067	CHIP CAP.	0.01uF	50V	B	GRM188B11H103KA01D	K22174823		1-	B	a2
C 4068	CHIP CAP.	0.01uF	50V	B	GRM188B11H103KA01D	K22174823		1-	B	a2
C 4069	CHIP CAP.	0.001uF	50V	B	GRM188B11H102KA01D	K22174821		1-	B	a2
C 4070	CHIP CAP.	22pF	50V	CH	GRM1552C1H220JA01D	K22178220		1-	B	b2
C 4071	CHIP CAP.	0.1uF	25V	B	GRM188B11E104KA01D	K22144814		1-	A	A2
C 4072	CHIP CAP.	0.01uF	25V	B	GRM155B11E103KA01D	K22148834		1-	B	b2
C 4073	CHIP CAP.	0.01uF	50V	B	GRM188B11H103KA01D	K22174823		1-	A	A2
C 4074	CHIP CAP.	22pF	50V	CH	GRM1552C1H220JA01D	K22178220		1-	B	b2
C 4075	CHIP CAP.	0.01uF	25V	B	GRM155B11E103KA01D	K22148834		1-	A	B2
C 4076	CHIP CAP.	0.001uF	50V	B	GRM188B11H102KA01D	K22174821		1-	A	B2
C 4077	CHIP TA.CAP.	4.7uF	16V		TMCMA1C475MTRF	K78120031		1-	A	A2

REF	DESCRIPTION	VALUE	V/W	TOL.	MFR'S DESIG	YAESU P/N	VERS.	LOT	SIDE	LAY ADR
C 4077	CHIP TA.CAP.	4.7uF	16V		F931C475MAA	K78120097		15-	A	A2
C 4078	CHIP CAP.	0.01uF	50V	B	GRM188B11H103KA01D	K22174823		1-	B	a2
C 4079	CHIP CAP.	0.01uF	50V	B	GRM188B11H103KA01D	K22174823		1-	B	a2
C 4080	CHIP CAP.	100pF	50V	CH	GRM1882C1H101JA01D	K22174235		1-	B	a2
C 4081	CHIP CAP.	0.1uF	25V	B	GRM188B11E104KA01D	K22144814		1-	B	a2
C 4082	CHIP CAP.	0.001uF	50V	B	UMK105B102KW-F	K22178829		1-	A	A2
C 4083	CHIP CAP.	0.01uF	25V	B	GRM155B11E103KA01D	K22148834		1-	A	A2
C 4084	CHIP CAP.	0.01uF	25V	B	GRM155B11E103KA01D	K22148834		1-	A	A2
C 4085	CHIP CAP.	0.01uF	25V	B	GRM155B11E103KA01D	K22148834		1-	A	A2
C 4086	CHIP CAP.	22pF	50V	CH	GRM1552C1H220JA01D	K22178220		1-	A	A2
C 4087	CHIP CAP.	1uF	10V	B	GRM155B31A105KE15D	K22108809		1-	A	A2
C 4088	CHIP CAP.	0.1uF	10V	B	GRM155B11A104JA01D	K22108807		1-	B	b2
C 4089	CHIP CAP.	0.1uF	10V	B	GRM155B11A104JA01D	K22108807		1-	B	b2
C 4090	CHIP CAP.	0.1uF	10V	B	GRM155B11A104JA01D	K22108807		1-	B	b2
C 4091	CHIP CAP.	1uF	10V	B	GRM155B31A105KE15D	K22108809		1-	A	A2
C 4092	CHIP CAP.	1uF	10V	B	GRM188B11A105KA61D	K22104808		1-	B	b2
C 4093	CHIP CAP.	0.01uF	25V	B	GRM155B11E103KA01D	K22148834		1-	A	A2
C 4094	CHIP CAP.	0.1uF	10V	B	GRM155B11A104JA01D	K22108807		1-	B	b1
C 4095	CHIP CAP.	0.01uF	25V	B	GRM155B11E103KA01D	K22148834		1-	A	A2
C 4096	CHIP CAP.	0.001uF	50V	B	GRM155B11H102KA01D	K22178809		1-	B	b2
C 4097	CHIP TA.CAP.	4.7uF	16V		TMCMA1C475MTRF	K78120031		1-	B	a2
C 4097	CHIP TA.CAP.	4.7uF	16V		F931C475MAA	K78120097		15-	B	a2
C 4098	CHIP CAP.	0.01uF	25V	B	GRM155B11E103KA01D	K22148834		1-	B	b2
C 4099	CHIP CAP.	0.01uF	50V	B	GRM188B11H103KA01D	K22174823		1-	A	B2
C 4100	CHIP CAP.	0.01uF	50V	B	GRM188B11H103KA01D	K22174823		1-	B	a2
C 4101	CHIP TA.CAP.	4.7uF	16V		TMCMA1C475MTRF	K78120031		1-	B	a2
C 4101	CHIP TA.CAP.	4.7uF	16V		F931C475MAA	K78120097		15-	B	a2
C 4102	CHIP CAP.	0.01uF	50V	B	GRM188B11H103KA01D	K22174823		1-	A	B2
C 4103	CHIP CAP.	0.1uF	25V	B	GRM188B11E104KA01D	K22144814		1-	B	a2
C 4104	CHIP CAP.	33pF	50V	CH	GRM1552C1H330JA01D	K22178224		1-	B	b2
CF4001	CERAMIC FILTER				SFECF10M7GA00-R0	H3900577		1-	A	A2
D 4001	DIODE				1SV325(TPH3.F)	G2070848		1-	A	A1
D 4002	DIODE				1SV325(TPH3.F)	G2070848		1-	A	A1
D 4003	DIODE				1SV325(TPH3.F)	G2070848		1-	A	A1
D 4004	DIODE				1SV325(TPH3.F)	G2070848		1-	A	A1
D 4005	DIODE				1SV325(TPH3.F)	G2070848		1-	A	B1
D 4006	DIODE				1SV325(TPH3.F)	G2070848		1-	A	B1
D 4007	DIODE				RB886Y G T2R	G2071464		1-	A	B2
D 4008	DIODE				UDZS TE-17 6.2B	G2070912		1-	B	a2
D 4009	DIODE				UDZS TE-17 6.8B	G2070888		1-	B	a2
J 4001	CONNECTOR				9230B-1-13Z003-T	P0091614		1-	B	b2
J 4002	CONNECTOR				9230B-1-07Z003-PT1	P0090857		1-	B	b2
L 4001	M.RFC	1uH		5%	C2012C-1R0J	L1691160		1-	A	A1
L 4002	COIL 05RF				RF-5SB-4.5TS-A	L0023270		1-	A	A1
L 4003	M.RFC	0.68uH		5%	C2012C-R68J	L1691158		1-	A	A1
L 4004	COIL 05RF				RF-5SB-4.5TS-A	L0023270		1-	A	A1
L 4005	M.RFC	0.56uH		5%	C2012C-R56J	L1691020		1-	A	B1
L 4006	COIL 05RF				RF-5SB-3.5T-A	L0023274		1-	A	B1
L 4007	M.RFC	1uH		5%	C2012C-1R0J	L1691160		1-	A	A1
L 4008	M.RFC	1uH		5%	C2012C-1R0J	L1691160		1-	A	A1
L 4009	M.RFC	1uH		5%	C2012C-1R0J	L1691160		1-	A	B1
L 4010	M.RFC	1uH			LK1608 1R0K-T	L1690687		1-	A	B2
L 4011	M.RFC	0.68uH			LK1608 R68K-T	L1690416		1-	A	B2
L 4012	M.RFC	10uH			LK1608 100K-T	L1690689		1-	B	a2
L 4013	M.RFC	1uH			LK1608 1R0K-T	L1690687		1-	A	B2
L 4014	M.RFC	0.68uH			LK1608 R68K-T	L1690416		1-	A	B2
L 4015	M.RFC	10uH			LK1608 100K-T	L1690689		1-	B	a2
L 4016	M.RFC	10uH			LK1608 100K-T	L1690689		1-	B	b2
L 4017	M.RFC	10uH			LK1608 100K-T	L1690689		1-	B	b2
Q 4001	TRANSISTOR				DTC114EUA T106	G3070084		1-	A	A2
Q 4002	TRANSISTOR				DTC114EUA T106	G3070084		1-	A	A2
Q 4003	TRANSISTOR				DTC114EUA T106	G3070084		1-	A	B2
Q 4004	FET				CPH3910-TL-E	G3070486		1-	A	A1
Q 4005	FET				CPH3910-TL-E	G3070486		1-	A	A1
Q 4006	FET				CPH3910-TL-E	G3070486		1-	A	B1
Q 4007	TRANSISTOR				2SC4081 T106	G3340818		1-	B	a2
Q 4008	TRANSISTOR				2SC4081 T106	G3340818		1-	A	A2
Q 4009	IC				UPC2709TB-E3	G1095238		1-	A	B2
Q 4010	IC				ADF4116BRUZ(TAPE)	G1093581		1-	A	A2
Q 4011	IC				UPC2709TB-E3	G1095238		1-	A	B2
Q 4012	TRANSISTOR				DTA144EU T106	G3070079		1-	B	a2
Q 4013	TRANSISTOR				2SC4215Y(TE85R.F)	G3342157Y		1-	A	A2
Q 4014	IC				AD9834BRUZ-REEL7	G1094297		1-	B	b2
Q 4015	TRANSISTOR				DTC144EUA T106	G3070041		1-	B	a2
Q 4016	TRANSISTOR				2SC4215Y(TE85R.F)	G3342157Y		1-	B	b2

REF	DESCRIPTION	VALUE	V/W	TOL.	MFR'S DESIG	YAESU P/N	VERS.	LOT	SIDE	LAY ADR
R 4001	CHIP RES.	47	1/16W	5%	RMC1/16 470JATP	J24185470		1-	A	A1
R 4002	CHIP RES.	47	1/16W	5%	RMC1/16 470JATP	J24185470		1-	A	A1
R 4003	CHIP RES.	22k	1/16W	5%	RMC1/16 223JATP	J24185223		1-	A	A2
R 4004	CHIP RES.	47	1/16W	5%	RMC1/16 470JATP	J24185470		1-	A	B1
R 4005	CHIP RES.	22k	1/16W	5%	RMC1/16 223JATP	J24185223		1-	A	A2
R 4006	CHIP RES.	22k	1/16W	5%	RMC1/16 223JATP	J24185223		1-	A	B2
R 4007	CHIP RES.	100k	1/16W	5%	RMC1/16 104JATP	J24185104		1-	A	A1
R 4008	CHIP RES.	100	1/16W	5%	RMC1/16 101JATP	J24185101		1-	A	A1
R 4009	CHIP RES.	470k	1/16W	5%	RMC1/16 474JATP	J24185474		1-	B	b1
R 4010	CHIP RES.	100k	1/16W	5%	RMC1/16 104JATP	J24185104		1-	A	A1
R 4011	CHIP RES.	220	1/16W	5%	RMC1/16 221JATP	J24185221		1-	A	A1
R 4012	CHIP RES.	4.7k	1/16W	5%	RMC1/16 472JATP	J24185472		1-	B	b1
R 4013	CHIP RES.	100	1/16W	5%	RMC1/16 101JATP	J24185101		1-	A	A1
R 4014	CHIP RES.	470k	1/16W	5%	RMC1/16 474JATP	J24185474		1-	B	a1
R 4015	CHIP RES.	100k	1/16W	5%	RMC1/16 104JATP	J24185104		1-	A	B1
R 4016	CHIP RES.	220	1/16W	5%	RMC1/16 221JATP	J24185221		1-	A	A2
R 4017	CHIP RES.	4.7k	1/16W	5%	RMC1/16 472JATP	J24185472		1-	B	a1
R 4018	CHIP RES.	100	1/16W	5%	RMC1/16 101JATP	J24185101		1-	A	B1
R 4019	CHIP RES.	470k	1/16W	5%	RMC1/16 474JATP	J24185474		1-	B	a1
R 4020	CHIP RES.	150	1/16W	5%	RMC1/16 151JATP	J24185151		1-	A	B2
R 4020	CHIP RES.	220	1/16W	5%	RMC1/16 221JATP	J24185221		7-	A	B2
R 4021	CHIP RES.	4.7k	1/16W	5%	RMC1/16 472JATP	J24185472		1-	B	a1
R 4022	CHIP RES.	0	1/16W	5%	RMC1/16S JPTH	J24189070		1-	A	B2
R 4024	CHIP RES.	100	1/16W	5%	RMC1/16S 101JTH	J24189013		1-	A	B2
R 4026	CHIP RES.	2.2k	1/16W	5%	RMC1/16 222JATP	J24185222		1-	A	B2
R 4027	CHIP RES.	220	1/16W	5%	RMC1/16 221JATP	J24185221		1-	B	a2
R 4028	CHIP RES.	220	1/16W	5%	RMC1/16 221JATP	J24185221		1-	A	A2
R 4029	CHIP RES.	39	1/16W	5%	RMC1/16 390JATP	J24185390		1-	B	a2
R 4030	CHIP RES.	100k	1/16W	5%	RMC1/16S 104JTH	J24189049		1-	A	A2
R 4031	CHIP RES.	100	1/16W	5%	RMC1/16S 101JTH	J24189013		1-	A	B2
R 4032	CHIP RES.	100	1/16W	5%	RMC1/16S 101JTH	J24189013		1-	A	A2
R 4033	CHIP RES.	100	1/16W	5%	RMC1/16S 101JTH	J24189013		1-	A	B2
R 4034	CHIP RES.	150	1/16W	5%	RMC1/16 151JATP	J24185151		1-	B	a2
R 4035	CHIP RES.	10k	1/16W	5%	RMC1/16 103JATP	J24185103		1-	A	B2
R 4036	CHIP RES.	1k	1/16W	5%	RMC1/16 102JATP	J24185102		1-	A	A2
R 4037	CHIP RES.	680	1/16W	5%	RMC1/16 681JATP	J24185681		1-	A	A2
R 4037	CHIP RES.	1.5k	1/16W	5%	RMC1/16 152JATP	J24185152		3-	A	A2
R 4038	CHIP RES.	47k	1/16W	5%	RMC1/16 473JATP	J24185473		1-	B	a2
R 4039	CHIP RES.	47	1/16W	0.5%	MCR01MZPD47R0	J24189346		1-	B	b2
R 4040	CHIP RES.	47	1/16W	0.5%	MCR01MZPD47R0	J24189346		1-	B	b2
R 4041	CHIP RES.	1k	1/16W	5%	RMC1/16 102JATP	J24185102		1-	A	A2
R 4042	CHIP RES.	1k	1/16W	5%	RMC1/16 102JATP	J24185102		1-	B	a1
R 4043	CHIP RES.	0	1/16W	5%	RMC1/16S JPTH	J24189070		1-	A	B2
R 4044	CHIP RES.	150	1/16W	5%	RMC1/16 151JATP	J24185151		1-	B	a2
R 4047	CHIP RES.	47	1/16W	5%	RMC1/16 470JATP	J24185470		1-	B	a2
R 4048	CHIP RES.	1k	1/16W	5%	RMC1/16S 102JTH	J24189025		1-	A	A2
R 4049	CHIP RES.	100k	1/16W	5%	RMC1/16S 104JTH	J24189049		1-	A	A2
R 4050	CHIP RES.	6.8k	1/16W	5%	RMC1/16S 682JTH	J24189035		1-	B	b2
R 4051	CHIP RES.	100	1/16W	5%	RMC1/16S 101JTH	J24189013		1-	B	b2
R 4052	CHIP RES.	100	1/16W	5%	RMC1/16S 101JTH	J24189013		1-	B	b2
R 4053	CHIP RES.	100	1/16W	5%	RMC1/16S 101JTH	J24189013		1-	B	b2
R 4054	CHIP RES.	47	1/16W	5%	RMC1/16S 470JTH	J24189009		1-	B	b2
R 4055	CHIP RES.	33k	1/16W	5%	RMC1/16 333JATP	J24185333		1-	B	a2
R 4056	CHIP RES.	3.3k	1/16W	5%	RMC1/16 332JATP	J24185332		1-	B	a2
R 4058	CHIP RES.	680	1/16W	5%	RMC1/16S 681JTH	J24189023		1-	B	b2
R 4059	CHIP RES.	100k	1/16W	5%	RMC1/16S 104JTH	J24189049		1-	B	b2
R 4060	CHIP RES.	33k	1/16W	5%	RMC1/16S 333JTH	J24189043		1-	B	b2
T 4001	BALUN TRANSFOMER$				#617DS-1710	L0190275		1-	A	B2
T 4002	BALUN TRANSFOMER$				#458PT-1565	L0190273		1-	A	A2
	SHIELD CASE PLL					RA6079100		1-		
	SHIELD CASE COVER				(PLL)	RA6079200		1-		

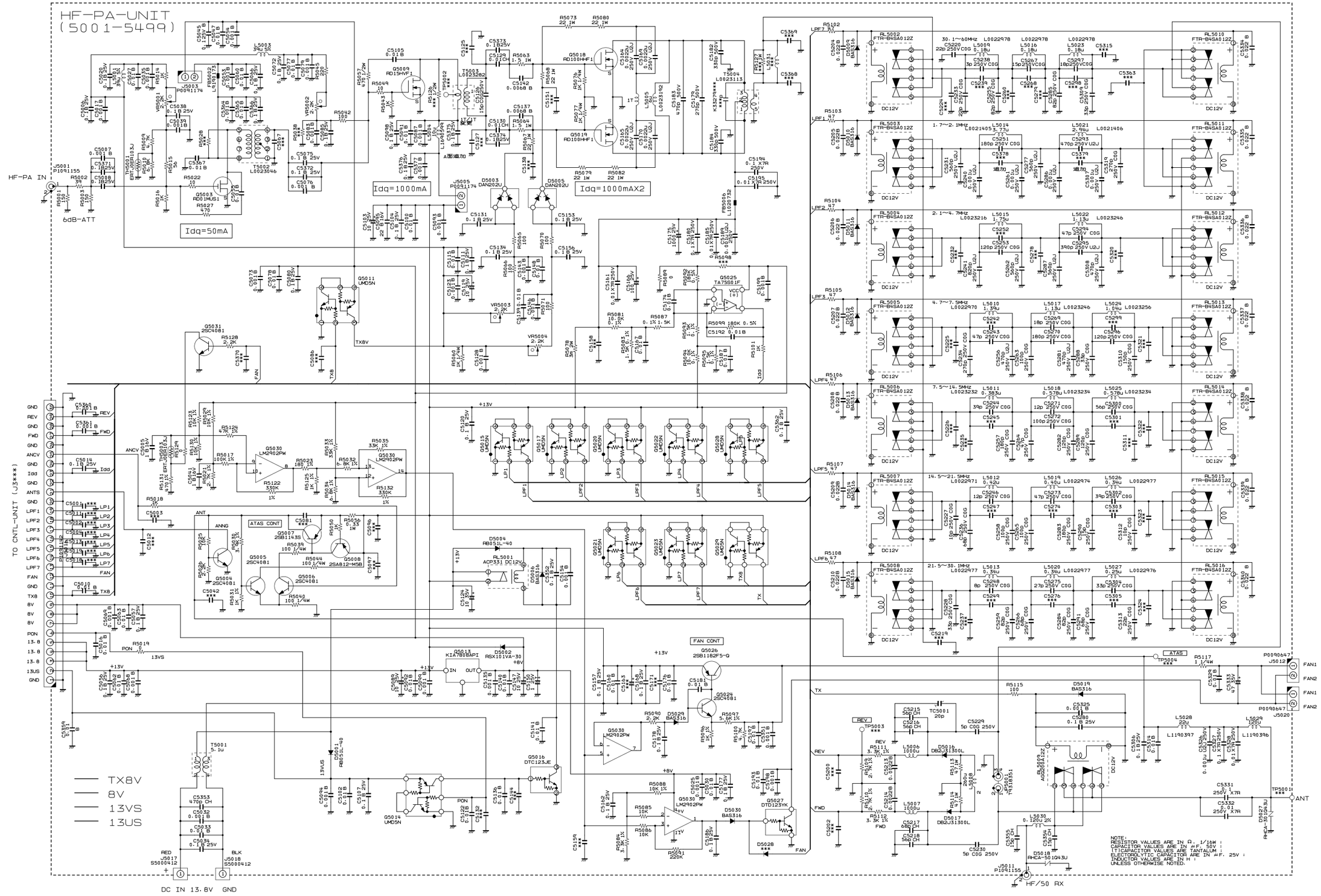
HF-PA-UNIT
(5001-5499)
HF-PA IN
6dB-ATT
Idq=50mA
Idq=1000mA
Idq=1000mAX2
TO CNTL-UNIT (J3***)
GND
REV
FWD
ANCV
Idd
ANTS
LPF1
LPF2
LPF3
LPF4
LPF5
LPF6
LPF7
FAN
TX8
8V
PON
13.8
13US
TX8V
8V
13VS
13US
RED
BLK
DC IN 13.8V GND
HF/50 RX
ANT
FAN1
FAN2
ATAS
FAN CONT
ATAS CONT
30.1~60MHz
1.7~2.1MHz
2.1~4.7MHz
4.7~7.5MHz
7.5~14.5MHz
14.5~21.5MHz
21.5~30.1MHz
DC12V
NOTE:
RESISTOR VALUES ARE IN Ω, 1/16W ;
CAPACITOR VALUES ARE IN μF, 50V ;
(T)CAPACITOR VALUES ARE TANTALUM ;
ELECTOROLYTIC CAPACITOR ARE IN μF, 25V ;
INDUCTOR VALUES ARE IN H ;
UNLESS OTHERWISE NOTED.

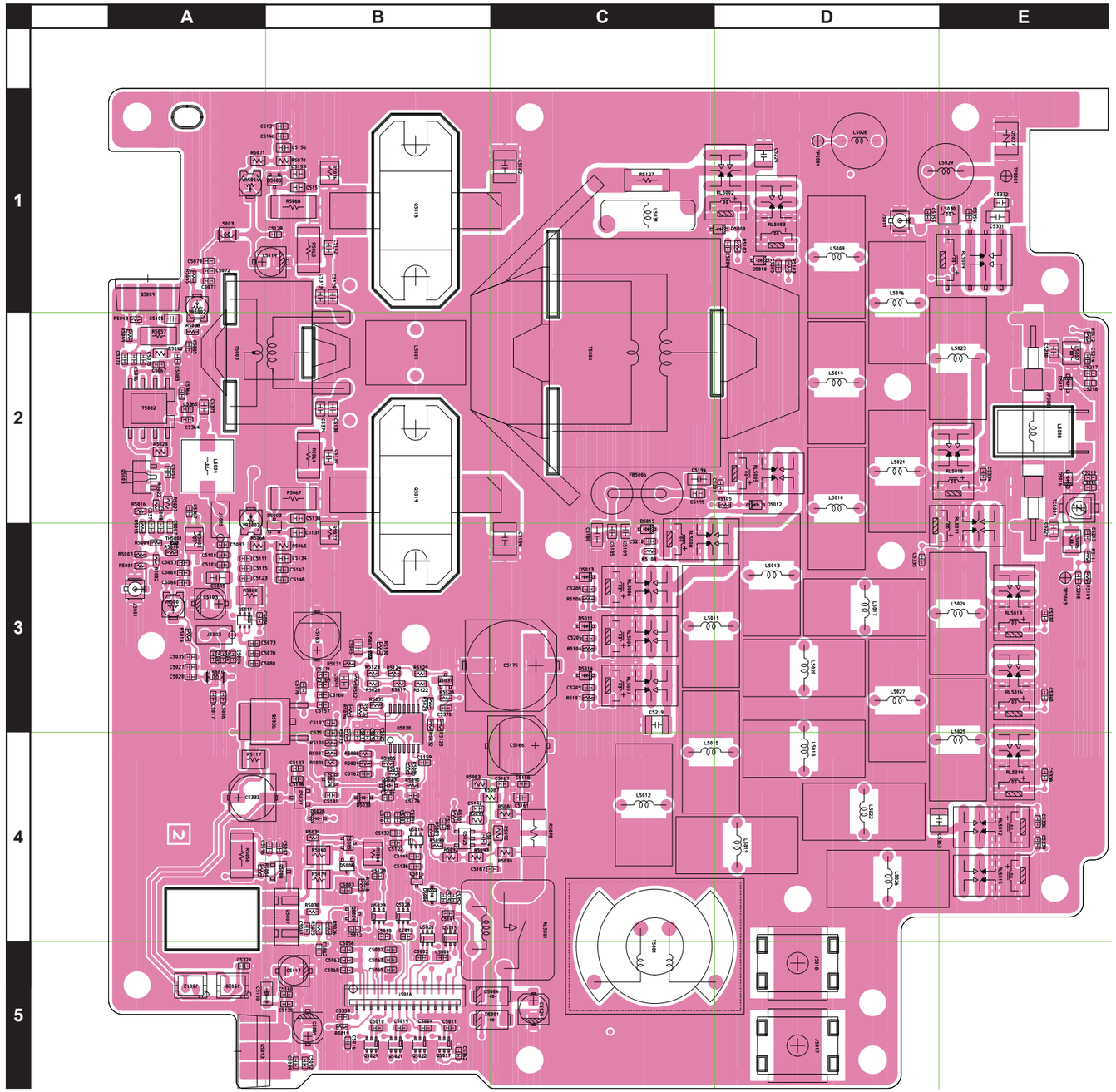
A
B
C
D
E
1
2
3
4
5

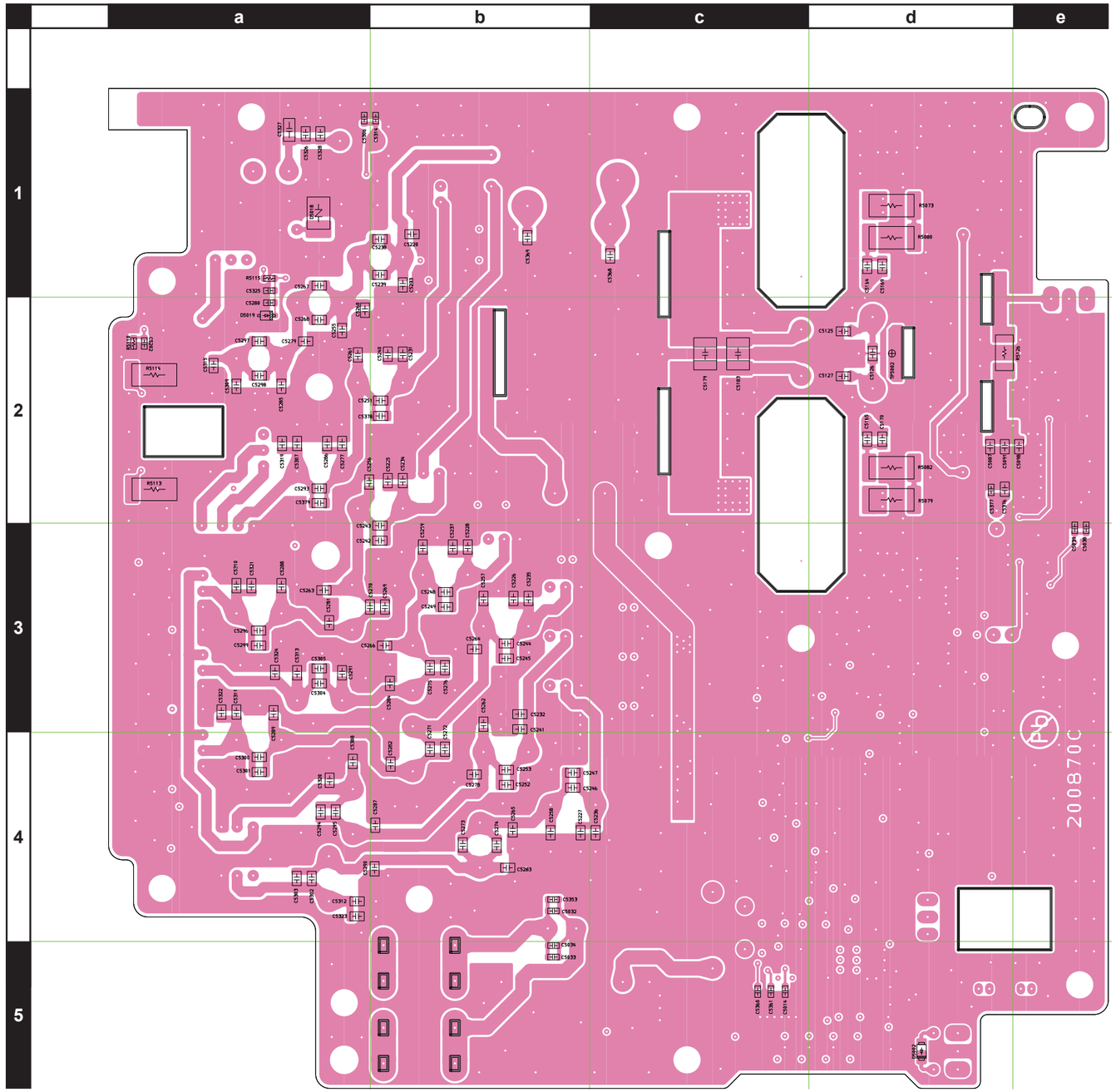
a
b
c
d
e
1
2
3
4
5
200870C

REF	DESCRIPTION	VALUE	V/W	TOL.	MFR'S DESIG	YAESU P/N	VERS.	LOT	SIDE	LAY ADR
	PCB with Components (with GROUND PLATE: RA6076300)					CS2460401				
C 5005	CHIP CAP.	1uF	16V	B	GRM21BB11C105KA01L	K22120809		1-	A	B3
C 5006	CHIP CAP.	0.1uF	25V	B	GRM188B11E104KA01D	K22144814		1-	A	A3
C 5007	CHIP CAP.	0.001uF	50V	B	GRM188B11H102KA01D	K22174821		1-	A	A3
C 5008	CHIP CAP.	0.1uF	25V	B	GRM188B11E104KA01D	K22144814		1-	A	A3
C 5010	CHIP CAP.	0.01uF	50V	B	GRM188B11H103KA01D	K22174823		1-	A	B5
C 5014	CHIP CAP.	0.1uF	25V	B	GRM188B11E104KA01D	K22144814		1-	B	c5
C 5016	CHIP CAP.	0.01uF	50V	B	GRM188B11H103KA01D	K22174823		1-	A	B5
C 5017	CHIP CAP.	0.001uF	50V	B	GRM188B11H102KA01D	K22174821		1-	A	A3
C 5020	CHIP CAP.	0.1uF	25V	B	GRM188B11E104KA01D	K22144814		1-	A	A3
C 5025	CHIP CAP.	0.001uF	50V	B	GRM188B11H102KA01D	K22174821		1-	A	B4
C 5027	CHIP CAP.	0.01uF	50V	B	GRM188B11H103KA01D	K22174823		1-	A	A3
C 5030	CHIP CAP.	0.01uF	50V	B	GRM188B11H103KA01D	K22174823		1-	A	B4
C 5032	CHIP CAP.	0.001uF	50V	B	GRM188B11H102KA01D	K22174821		1-	B	b4
C 5033	CHIP CAP.	0.01uF	50V	B	GRM188B11H103KA01D	K22174823		1-	B	b5
C 5034	CHIP CAP.	0.1uF	25V	B	GRM188B11E104KA01D	K22144814		1-	B	b5
C 5035	CHIP CAP.	0.001uF	50V	B	GRM188B11H102KA01D	K22174821		1-	A	A3
C 5038	CHIP CAP.	0.1uF	25V	B	GRM188B11E104KA01D	K22144814		1-	B	e3
C 5039	CHIP CAP.	0.001uF	50V	B	GRM188B11H102KA01D	K22174821		1-	B	e3
C 5041	CHIP CAP.	1uF	16V	B	GRM21BB11C105KA01L	K22120809		1-	A	B3
C 5045	CHIP CAP.	0.1uF	25V	B	GRM188B11E104KA01D	K22144814		1-	A	A3
C 5047	CHIP CAP.	0.01uF	50V	B	GRM188B11H103KA01D	K22174823		1-	A	A3
C 5053	CHIP CAP.	0.001uF	50V	B	GRM188B11H102KA01D	K22174821		1-	A	A3
C 5054	CHIP CAP.	0.001uF	50V	B	GRM188B11H102KA01D	K22174821		1-	A	A3
C 5055	CHIP CAP.	0.01uF	50V	B	GRM188B11H103KA01D	K22174823		1-	A	A2
C 5056	CHIP CAP.	0.1uF	25V	B	GRM188B11E104KA01D	K22144814		1-	A	B5
C 5057	CHIP CAP.	0.1uF	25V	B	GRM188B11E104KA01D	K22144814		1-	A	B5
C 5060	CHIP CAP.	0.01uF	50V	B	GRM188B11H103KA01D	K22174823		1-	A	A3
C 5062	CHIP CAP.	0.01uF	50V	B	GRM188B11H103KA01D	K22174823		1-	A	B5
C 5063	CHIP CAP.	0.01uF	50V	B	GRM188B11H103KA01D	K22174823		1-	A	B5
C 5066	CHIP CAP.	0.1uF	25V	B	GRM188B11E104KA01D	K22144814		1-	A	A3
C 5068	CHIP CAP.	0.001uF	50V	B	GRM188B11H102KA01D	K22174821		1-	A	B5
C 5069	CHIP CAP.	0.001uF	50V	B	GRM188B11H102KA01D	K22174821		1-	A	B5
C 5072	CHIP CAP.	0.1uF	25V	B	GRM188B11E104KA01D	K22144814		1-	A	A1
C 5073	CHIP CAP.	0.001uF	50V	B	GRM188B11H102KA01D	K22174821		1-	A	A3
C 5075	CHIP CAP.	0.1uF	25V	B	GRM188B11E104KA01D	K22144814		1-	A	A2
C 5076	CHIP CAP.	0.001uF	50V	B	GRM188B11H102KA01D	K22174821		1-	A	A2
C 5077	CHIP CAP.	0.01uF	50V	B	GRM188B11H103KA01D	K22174823		1-	A	A1
C 5078	CHIP CAP.	0.01uF	50V	B	GRM188B11H103KA01D	K22174823		1-	A	A3
C 5079	CHIP CAP.	0.001uF	50V	B	GRM188B11H102KA01D	K22174821		1-	A	A1
C 5080	CHIP CAP.	0.1uF	25V	B	GRM188B11E104KA01D	K22144814		1-	A	A3
C 5083	CHIP CAP.	0.001uF	50V	B	GRM188B11H102KA01D	K22174821		1-	A	A2
C 5085	CHIP CAP.	0.1uF	25V	B	GRM188B11E104KA01D	K22144814		1-	A	A2
C 5087	CHIP CAP.	0.001uF	50V	B	GRM216B11H102KA01D	K22170825		1-	B	d2
C 5089	AL.ELECTRO.CAP.	10uF	25V		EMVA250ADA100MD55G	K48140014		1-	A	B5
C 5091	CHIP CAP.	0.01uF	50V	B	GRM216B11H103KA01D	K22170817		1-	B	d2
C 5092	CHIP CAP.	0.01uF	50V	B	GRM188B11H103KA01D	K22174823		1-	A	B5
C 5093	CHIP CAP.	0.001uF	50V	B	GRM188B11H102KA01D	K22174821		1-	A	A3
C 5094	CHIP CAP.	0.001uF	50V	B	GRM188B11H102KA01D	K22174821		1-	A	B4
C 5095	CHIP CAP.	22uF	16V	B	GRM31CB31C226ME15L	K22121804		1-	A	A3
C 5098	CHIP CAP.	0.1uF	25V	B	GRM21BB11E104KA01L	K22140811		1-	B	e2
C 5099	CHIP CAP.	0.001uF	50V	B	GRM188B11H102KA01D	K22174821		1-	A	B5
C 5100	CHIP CAP.	0.01uF	50V	B	GRM188B11H103KA01D	K22174823		1-	A	A3
C 5102	CHIP CAP.	0.01uF	50V	B	GRM188B11H103KA01D	K22174823		1-	A	B4
C 5103	AL.ELECTRO.CAP.	10uF	25V		EMVA250ADA100MD55G	K48140014		1-	A	A3
C 5104	CHIP CAP.	0.1uF	25V	B	GRM188B11E104KA01D	K22144814		1-	A	A3
C 5105	CHIP CAP.	0.01uF	50V	B	GRM216B11H103KA01D	K22170817		1-	A	A2
C 5107	CHIP CAP.	0.1uF	25V	B	GRM188B11E104KA01D	K22144814		1-	A	B4
C 5111	CHIP CAP.	0.1uF	25V	B	GRM188B11E104KA01D	K22144814		1-	A	A3
C 5115	CHIP CAP.	0.01uF	50V	B	GRM188B11H103KA01D	K22174823		1-	A	A3
C 5119	AL.ELECTRO.CAP.	10uF	25V		EMVA250ADA100MD55G	K48140014		1-	A	A1
C 5120	CHIP CAP.	0.1uF	25V	B	GRM188B11E104KA01D	K22144814		1-	A	B4
C 5122	CHIP CAP.	0.01uF	50V	B	GRM188B11H103KA01D	K22174823		1-	A	B4
C 5123	CHIP CAP.	0.001uF	50V	B	GRM188B11H102KA01D	K22174821		1-	A	A3
C 5124	AL.ELECTRO.CAP.	10uF	35V		EEE1VA100WR	K48160006		1-	A	C5
C 5126	CHIP CAP.	15pF	250V	C0G	GRM21A5C2E150JW01D	K22240303		1-	B	d2
C 5128	CHIP CAP.	0.001uF	50V	B	GRM188B11H102KA01D	K22174821		1-	A	B1
C 5129	CHIP CAP.	0.01uF	50V	CH	GRM2192C1H103JA01D	K22170291		1-	A	B1
C 5130	CHIP CAP.	0.01uF	50V	CH	GRM2192C1H103JA01D	K22170291		1-	A	B2
C 5131	CHIP CAP.	0.1uF	25V	B	GRM21BB11E104KA01L	K22140811		1-	A	B3
C 5134	CHIP CAP.	0.1uF	25V	B	GRM21BB11E104KA01L	K22140811		1-	A	B3
C 5135	CHIP CAP.	0.001uF	50V	B	GRM188B11H102KA01D	K22174821		1-	A	B5
C 5136	CHIP CAP.	0.01uF	50V	B	GRM188B11H103KA01D	K22174823		1-	A	B4
C 5137	CHIP CAP.	0.0068uF	50V	B	GRM216B11H682KA01D	K22170815		1-	A	B2
C 5139	CHIP CAP.	0.01uF	50V	B	GRM188B11H103KA01D	K22174823		1-	A	B1

REF	DESCRIPTION	VALUE	V/W	TOL.	MFR'S DESIG	YAESU P/N	VERS.	LOT	SIDE	LAY ADR
C 5140	CHIP CAP.	0.01uF	50V	B	GRM188B11H103KA01D	K22174823		1-	A	B5
C 5141	CHIP CAP.	0.01uF	50V	B	GRM188B11H103KA01D	K22174823		1-	A	B4
C 5142	CHIP CAP.	0.0068uF	50V	B	GRM216B11H682KA01D	K22170815		1-	A	B1
C 5143	CHIP CAP.	0.001uF	50V	B	GRM188B11H102KA01D	K22174821		1-	A	B3
C 5146	CHIP CAP.	0.001uF	50V	B	GRM188B11H102KA01D	K22174821		1-	A	B1
C 5147	AL.ELECTRO.CAP.	10uF	25V		EMVA250ADA100MD55G	K48140014		1-	A	B5
C 5148	CHIP CAP.	0.01uF	50V	B	GRM188B11H103KA01D	K22174823		1-	A	B3
C 5150	CHIP TA.CAP.	1uF	25V		TMCMA1E105MTRF	K78140013		1-	A	A5
C 5153	CHIP CAP.	0.1uF	25V	B	GRM21BB11E104KA01L	K22140811		1-	A	B1
C 5154	CHIP CAP.	0.001uF	50V	B	GRM188B11H102KA01D	K22174821		1-	A	B4
C 5156	CHIP CAP.	0.1uF	25V	B	GRM21BB11E104KA01L	K22140811		1-	A	B1
C 5157	CHIP CAP.	0.1uF	25V	B	GRM188B11E104KA01D	K22144814		1-	A	B3
C 5160	CHIP CAP.	0.01uF	50V	B	GRM188B11H103KA01D	K22174823		1-	A	B3
C 5161	CHIP CAP.	0.01uF	250V	X7R	GRM21BR72E103KW03L	K22240801		1-	A	C4
C 5162	CHIP CAP.	0.1uF	25V	B	GRM188B11E104KA01D	K22144814		1-	A	B4
C 5164	CHIP CAP.	0.0022uF	250V	U2J	GRM21A7U2E222JW31D	K22240329		1-	B	d1
C 5165	CHIP CAP.	0.0022uF	250V	U2J	GRM21A7U2E222JW31D	K22240329		1-	B	d2
C 5166	AL.ELECTRO.CAP.	100uF	25V		UWX1E101MCL1GB	K48140024		1-	A	C4
C 5167	CHIP CAP.	0.01uF	50V	B	GRM188B11H103KA01D	K22174823		1-	A	C4
C 5168	CHIP CAP.	0.1uF	25V	B	GRM188B11E104KA01D	K22144814		1-	A	B3
C 5169	CHIP CAP.	0.0022uF	250V	U2J	GRM21A7U2E222JW31D	K22240329		1-	B	d1
C 5170	CHIP CAP.	0.0022uF	250V	U2J	GRM21A7U2E222JW31D	K22240329		1-	B	d2
C 5174	CHIP CAP.	0.01uF	50V	B	GRM188B11H103KA01D	K22174823		1-	A	B4
C 5175	AL.ELECTRO.CAP.	1000uF	25V		25CE1000BS	K48140025		1-	A	C3
C 5176	CHIP CAP.	0.01uF	50V	B	GRM188B11H103KA01D	K22174823		1-	A	B3
C 5177	CHIP CAP.	0.1uF	25V	B	GRM188B11E104KA01D	K22144814		1-	A	B4
C 5178	CHIP CAP.	0.1uF	25V	B	GRM188B11E104KA01D	K22144814		1-	A	B4
C 5179	FILM CAP.	270pF	500V		UC342H2700J-T	K33279013		1-	B	c2
C 5180	CHIP CAP.	0.1uF	250V	X7R	GRM31CR72E104KW03L	K22241804		1-	A	C3
C 5181	CHIP CAP.	0.01uF	50V	B	GRM188B11H103KA01D	K22174823		1-	A	B4
C 5182	FILM CAP.	330pF	500V		UC342H3300J-T	K33279014		1-	A	C1
C 5183	FILM CAP.	470pF	500V		UC342H4700J-T	K33279015		1-	B	c2
C 5184	FILM CAP.	330pF	500V		UC342H3300J-T	K33279014		1-	A	C3
C 5185	CHIP CAP.	0.01uF	250V	X7R	GRM21BR72E103KW03L	K22240801		1-	A	C3
C 5186	CHIP CAP.	0.1uF	25V	B	GRM188B11E104KA01D	K22144814		1-	A	B4
C 5187	CHIP CAP.	0.01uF	50V	B	GRM188B11H103KA01D	K22174823		1-	A	C4
C 5189	CHIP CAP.	0.001uF	250V	U2J	GRM21A7U2E102JW31D	K22240325		1-	A	C3
C 5192	CHIP CAP.	0.01uF	50V	B	GRM188B11H103KA01D	K22174823		1-	A	B4
C 5193	CHIP CAP.	0.01uF	50V	B	GRM188B11H103KA01D	K22174823		1-	A	B4
C 5194	CHIP CAP.	0.1uF	250V	X7R	GRM31CR72E104KW03L	K22241804		1-	A	C2
C 5195	CHIP CAP.	0.01uF	250V	X7R	GRM21BR72E103KW03L	K22240801		1-	A	C2
C 5197	CHIP CAP.	0.01uF	50V	B	GRM188B11H103KA01D	K22174823		1-	A	B3
C 5198	CHIP CAP.	0.001uF	50V	B	GRM188B11H102KA01D	K22174821		1-	A	B4
C 5199	CHIP CAP.	0.001uF	50V	B	GRM188B11H102KA01D	K22174821		1-	A	B4
C 5204	CHIP CAP.	0.022uF	50V	B	GRM188B11H223KA01D	K22174839		1-	A	D1
C 5205	CHIP CAP.	0.022uF	50V	B	GRM188B11H223KA01D	K22174839		1-	A	D1
C 5206	CHIP CAP.	0.022uF	50V	B	GRM188B11H223KA01D	K22174839		1-	A	C3
C 5207	CHIP CAP.	0.022uF	50V	B	GRM188B11H223KA01D	K22174839		1-	A	D2
C 5208	CHIP CAP.	0.022uF	50V	B	GRM188B11H223KA01D	K22174839		1-	A	C3
C 5209	CHIP CAP.	0.022uF	50V	B	GRM188B11H223KA01D	K22174839		1-	A	C3
C 5210	CHIP CAP.	0.022uF	50V	B	GRM188B11H223KA01D	K22174839		1-	A	C3
C 5213	CHIP CAP.	0.0022uF	50V	B	GRM188B11H222KA01D	K22174822		1-	A	E3
C 5214	CHIP CAP.	0.0022uF	50V	B	GRM188B11H222KA01D	K22174822		1-	A	E2
C 5215	CHIP CAP.	56pF	50V	CH	GRM1882C1H560JA01D	K22174229		1-	A	E2
C 5216	CHIP CAP.	56pF	50V	CH	GRM1882C1H560JA01D	K22174229		1-	A	E2
C 5217	CHIP CAP.	68pF	50V	CH	GRM1882C1H680JA01D	K22174231		1-	A	E2
C 5218	CHIP CAP.	56pF	50V	CH	GRM1882C1H560JA01D	K22174229		1-	A	E2
C 5220	CHIP CAP.	27pF	250V	CH	GQM2195C2E270JB13D	K22240217		1-	B	b1
C 5227	CHIP CAP.	10pF	250V	C0G	GRM21A5C2E100JW01D	K22240301		1-	B	b4
C 5228	CHIP CAP.	33pF	250V	C0G	GRM21A5C2E330JW01D	K22240307		1-	B	b3
C 5229	CHIP CAP.	5pF	250V	C0G	GQM2195C2E5R0CB12D	K22240248		1-	A	E3
C 5230	CHIP CAP.	5pF	250V	C0G	GQM2195C2E5R0CB12D	K22240248		1-	A	E2
C 5231	CHIP CAP.	560pF	250V	U2J	GRM21A7U2E561JW31D	K22240322		1-	B	b2
C 5233	CHIP CAP.	27pF	250V	CH	GQM2195C2E270JB13D	K22240217		1-	B	b1
C 5234	CHIP CAP.	270pF	250V	C0G	GRM21A5C2E271JW01D	K22240318		1-	B	b2
C 5236	CHIP CAP.	68pF	250V	C0G	GRM21A5C2E680JW01D	K22240311		1-	B	c4
C 5238	CHIP CAP.	3pF	250V	C0G	GQM2195C2E3R0CB12D	K22240246		1-	B	b1
C 5240	CHIP CAP.	0.001uF	250V	U2J	GRM21A7U2E102JW31D	K22240325		1-	B	b2
C 5241	CHIP CAP.	820pF	250V	U2J	GRM21A7U2E821JW31D	K22240324		1-	B	b3
C 5243	CHIP CAP.	47pF	250V	C0G	GRM21A5C2E470JW01D	K22240309		1-	B	b3
C 5244	CHIP CAP.	12pF	250V	C0G	GRM21A5C2E120JW01D	K22240302		1-	B	b3
C 5245	CHIP CAP.	15pF	250V	C0G	GRM21A5C2E150JW01D	K22240303		1-	B	b3
C 5246	CHIP CAP.	12pF	250V	C0G	GRM21A5C2E120JW01D	K22240302		1-	B	b4
C 5248	CHIP CAP.	8pF	250V	C0G	GQM2195C2E8R0DB12D	K22240251		1-	B	b3
C 5251	CHIP CAP.	180pF	250V	C0G	GRM21A5C2E181JW01D	K22240316		1-	B	b2

REF	DESCRIPTION	VALUE	V/W	TOL.	MFR'S DESIG	YAESU P/N	VERS.	LOT	SIDE	LAY ADR
C 5253	CHIP CAP.	120pF	250V	C0G	GRM21A5C2E121JW01D	K22240314		1-	B	b4
C 5255	CHIP CAP.	82pF	250V	C0G	GQM2195C2E820JB12D	K22240257		1-	B	a2
C 5256	CHIP CAP.	470pF	250V	U2J	GRM21A7U2E471JW31D	K22240321		1-	B	a2
C 5257	CHIP CAP.	180pF	250V	C0G	GRM21A5C2E181JW01D	K22240316		1-	B	b3
C 5258	CHIP CAP.	100pF	250V	C0G	GRM21A5C2E101JW01D	K22240313		1-	B	b4
C 5259	CHIP CAP.	82pF	250V	C0G	GRM21A5C2E820JW01D	K22240312		1-	B	b3
C 5261	CHIP CAP.	0.001uF	250V	U2J	GRM21A7U2E102JW31D	K22240325		1-	B	a2
C 5262	CHIP CAP.	560pF	250V	U2J	GRM21A7U2E561JW31D	K22240322		1-	B	b3
C 5263	CHIP CAP.	100pF	250V	C0G	GRM21A5C2E101JW01D	K22240313		1-	B	a3
C 5264	CHIP CAP.	47pF	250V	C0G	GRM21A5C2E470JW01D	K22240309		1-	B	b3
C 5265	CHIP CAP.	100pF	250V	C0G	GRM21A5C2E101JW01D	K22240313		1-	B	b4
C 5266	CHIP CAP.	68pF	250V	C0G	GRM21A5C2E680JW01D	K22240311		1-	B	b3
C 5267	CHIP CAP.	15pF	250V	C0G	GQM2195C2E150JB12D	K22240234		1-	B	a1
C 5270	CHIP CAP.	180pF	250V	C0G	GRM21A5C2E181JW01D	K22240316		1-	B	a3
C 5271	CHIP CAP.	22pF	250V	C0G	GRM21A5C2E220JW01D	K22240305		1-	B	b4
C 5272	CHIP CAP.	120pF	250V	C0G	GRM21A5C2E121JW01D	K22240314		1-	B	b4
C 5273	CHIP CAP.	56pF	250V	C0G	GRM21A5C2E560JW01D	K22240310		1-	B	b4
C 5275	CHIP CAP.	47pF	250V	C0G	GRM21A5C2E470JW01D	K22240309		1-	B	b3
C 5277	CHIP CAP.	560pF	250V	U2J	GRM21A7U2E561JW31D	K22240322		1-	B	a2
C 5280	CHIP CAP.	0.1uF	25V	B	GRM188B11E104KA01D	K22144814		1-	B	a2
C 5281	CHIP CAP.	470pF	250V	U2J	GRM21A7U2E471JW31D	K22240321		1-	B	a3
C 5282	CHIP CAP.	150pF	250V	C0G	GRM21A5C2E151JW01D	K22240315		1-	B	b4
C 5283	CHIP CAP.	180pF	250V	C0G	GRM21A5C2E181JW01D	K22240316		1-	B	b4
C 5284	CHIP CAP.	82pF	250V	C0G	GRM21A5C2E820JW01D	K22240312		1-	B	b3
C 5285	CHIP CAP.	82pF	250V	C0G	GQM2195C2E820JB12D	K22240257		1-	B	a2
C 5286	CHIP CAP.	0.001uF	250V	U2J	GRM21A7U2E102JW31D	K22240325		1-	B	a2
C 5287	CHIP CAP.	560pF	250V	U2J	GRM21A7U2E561JW31D	K22240322		1-	B	b4
C 5288	CHIP CAP.	33pF	250V	C0G	GRM21A5C2E330JW01D	K22240307		1-	B	a3
C 5289	CHIP CAP.	120pF	250V	C0G	GRM21A5C2E121JW01D	K22240314		1-	B	a3
C 5290	CHIP CAP.	15pF	250V	C0G	GRM21A5C2E150JW01D	K22240303		1-	B	b4
C 5291	CHIP CAP.	68pF	250V	C0G	GRM21A5C2E680JW01D	K22240311		1-	B	a3
C 5293	CHIP CAP.	270pF	250V	C0G	GRM21A5C2E271JW01D	K22240318		1-	B	a2
C 5294	CHIP CAP.	150pF	250V	C0G	GRM21A5C2E151JW01D	K22240315		1-	B	a4
C 5295	CHIP CAP.	330pF	250V	C0G	GRM21A5C2E331JW01D	K22240319		1-	B	a4
C 5296	CHIP CAP.	120pF	250V	C0G	GRM21A5C2E121JW01D	K22240314		1-	B	a3
C 5297	CHIP CAP.	18pF	250V	C0G	GQM2195C2E180JB12D	K22240235		1-	B	a2
C 5300	CHIP CAP.	27pF	250V	C0G	GRM21A5C2E270JW01D	K22240306		1-	B	a4
C 5301	CHIP CAP.	27pF	250V	C0G	GRM21A5C2E270JW01D	K22240306		1-	B	a4
C 5302	CHIP CAP.	39pF	250V	C0G	GRM21A5C2E390JW01D	K22240308		1-	B	a4
C 5304	CHIP CAP.	33pF	250V	C0G	GRM21A5C2E330JW01D	K22240307		1-	B	a3
C 5306	CHIP CAP.	0.1uF	25V	B	GRM188B11E104KA01D	K22144814		1-	B	a1
C 5307	CHIP CAP.	0.001uF	250V	U2J	GRM21A7U2E102JW31D	K22240325		1-	B	a2
C 5308	CHIP CAP.	470pF	250V	U2J	GRM21A7U2E471JW31D	K22240321		1-	B	a4
C 5309	CHIP CAP.	15pF	250V	CH	GQM2195C2E150JB13D	K22240214		1-	B	a2
C 5310	CHIP CAP.	150pF	250V	C0G	GRM21A5C2E151JW01D	K22240315		1-	B	a3
C 5311	CHIP CAP.	100pF	250V	C0G	GRM21A5C2E101JW01D	K22240313		1-	B	a3
C 5312	CHIP CAP.	33pF	250V	C0G	GRM21A5C2E330JW01D	K22240307		1-	B	a4
C 5313	CHIP CAP.	33pF	250V	C0G	GRM21A5C2E330JW01D	K22240307		1-	B	a3
C 5314	CHIP CAP.	0.01uF	50V	B	GRM188B11H103KA01D	K22174823		1-	B	b1
C 5319	CHIP CAP.	270pF	250V	C0G	GRM21A5C2E271JW01D	K22240318		1-	B	a2
C 5325	CHIP CAP.	0.001uF	50V	B	GRM188B11H102KA01D	K22174821		1-	B	a1
C 5326	CHIP CAP.	0.001uF	250V	U2J	GRM21A7U2E102JW31D	K22240325		1-	B	a1
C 5327	CHIP CAP.	0.1uF	250V	X7R	GRM31CR72E104KW03L	K22241804		1-	B	a1
C 5328	CHIP CAP.	0.01uF	250V	X7R	GRM21BR72E103KW03L	K22240801		1-	B	a1
C 5329	CHIP CAP.	0.01uF	50V	B	GRM188B11H103KA01D	K22174823		1-	A	A5
C 5331	CHIP CAP.	0.1uF	250V	X7R	GRM31CR72E104KW03L	K22241804		1-	A	E1
C 5332	CHIP CAP.	0.01uF	250V	X7R	GRM21BR72E103KW03L	K22240801		1-	A	E1
C 5333	AL.ELECTRO.CAP.	47uF	35V		EEE1VA470WP	K48160005		1-	A	A4
C 5334	CHIP CAP.	0.022uF	50V	B	GRM188B11H223KA01D	K22174839		1-	A	E2
C 5335	CHIP CAP.	0.022uF	50V	B	GRM188B11H223KA01D	K22174839		1-	A	E3
C 5336	CHIP CAP.	0.022uF	50V	B	GRM188B11H223KA01D	K22174839		1-	A	E4
C 5337	CHIP CAP.	0.022uF	50V	B	GRM188B11H223KA01D	K22174839		1-	A	E3
C 5338	CHIP CAP.	0.022uF	50V	B	GRM188B11H223KA01D	K22174839		1-	A	E4
C 5339	CHIP CAP.	0.022uF	50V	B	GRM188B11H223KA01D	K22174839		1-	A	E4
C 5340	CHIP CAP.	0.022uF	50V	B	GRM188B11H223KA01D	K22174839		1-	A	E3
C 5351	CHIP CAP.	0.001uF	50V	B	GRM188B11H102KA01D	K22174821		1-	A	B4
C 5352	CHIP CAP.	0.1uF	25V	B	GRM188B11E104KA01D	K22144814		1-	A	B4
C 5353	CHIP CAP.	470pF	50V	CH	GRM1882C1H471JA01D	K22174249		1-	B	b4
C 5354	CHIP CAP.	15pF	50V	CH	GRM1882C1H150JA01D	K22174215		1-	A	E1
C 5355	CHIP CAP.	15pF	50V	CH	GRM1882C1H150JA01D	K22174215		1-	A	E1
C 5359	CHIP CAP.	0.01uF	50V	B	GRM188B11H103KA01D	K22174823		1-	A	B5
C 5360	CHIP CAP.	0.001uF	50V	B	GRM188B11H102KA01D	K22174821		1-	B	c5
C 5361	CHIP CAP.	0.001uF	50V	B	GRM188B11H102KA01D	K22174821		1-	B	c5
C 5362	CHIP CAP.	0.1uF	25V	B	GRM188B11E104KA01D	K22144814		1-	A	B5
C 5364	CHIP CAP.	0.001uF	50V	B	GRM188B11H102KA01D	K22174821		1-	A	A2

REF	DESCRIPTION	VALUE	V/W	TOL.	MFR'S DESIG	YAESU P/N	VERS.	LOT	SIDE	LAY ADR
C 5365	CHIP CAP.	0.01uF	50V	B	GRM188B11H103KA01D	K22174823		1-	A	A2
C 5366	CHIP CAP.	0.1uF	25V	B	GRM188B11E104KA01D	K22144814		1-	A	A2
C 5367	CHIP CAP.	0.01uF	50V	B	GRM188B11H103KA01D	K22174823		1-	A	A2
C 5371	CHIP CAP.	0.1uF	25V	B	GRM188B11E104KA01D	K22144814		1-	A	A3
C 5372	CHIP CAP.	0.1uF	25V	B	GRM188B11E104KA01D	K22144814		1-	A	A2
C 5373	CHIP CAP.	0.1uF	25V	B	GRM21BB11E104KA01L	K22140811		1-	A	B1
C 5374	CHIP CAP.	0.1uF	25V	B	GRM21BB11E104KA01L	K22140811		1-	A	B2
C 5375	CHIP CAP.	0.1uF	25V	B	GRM21BB11E104KA01L	K22140811		1-	A	A2
C 5376	CHIP CAP.	0.1uF	25V	B	GRM21BB11E104KA01L	K22140811		1-	B	d2
C 5377	CHIP CAP.	0.001uF	50V	B	GRM188B11H102KA01D	K22174821		1-	B	d2
C 5379	CHIP CAP.	270pF	250V	C0G	GRM21A5C2E271JW01D	K22240318		1-	B	a2
C 5380	CHIP CAP.	180pF	630V	C0G	GRM31A5C2J181JW01D	K22281235		1-		
D 5001	DIODE				RB051L-40TE25	G2070718		1-	A	C5
D 5002	DIODE				RSX101VA-30TR	G2070984		1-	B	d5
D 5003	DIODE				DAN202U T106	G2070162		1-	A	B3
D 5004	DIODE				RB051L-40TE25	G2070718		1-	A	C5
D 5005	DIODE				DAN202U T106	G2070162		1-	A	B1
D 5006	DIODE				BAS316	G2070716		1-	A	B4
D 5009	DIODE				BAS316	G2070716		1-	A	D1
D 5010	DIODE				BAS316	G2070716		1-	A	D1
D 5011	DIODE				BAS316	G2070716		1-	A	C3
D 5012	DIODE				BAS316	G2070716		1-	A	D2
D 5013	DIODE				BAS316	G2070716		1-	A	C3
D 5014	DIODE				BAS316	G2070716		1-	A	C3
D 5015	DIODE				BAS316	G2070716		1-	A	C3
D 5016	DIODE				DB2J31300L	G2071338		1-	A	E2
D 5017	DIODE				DB2J31300L	G2071338		1-	A	E2
D 5018	SURGE ABSORBER				RHCA-501Q43U	Q9000922		1-	B	a1
D 5019	DIODE				BAS316	G2070716		1-	B	a2
D 5027	SURGE ABSORBER				RHCA-301Q43U	Q9000827		1-	A	E1
D 5029	DIODE				BAS316	G2070716		1-	A	B4
D 5030	DIODE				BAS316	G2070716		1-	A	B4
FB5002	FERRITE BEADS				FBMH3225HM102NT	L9190173		1-	A	A3
FB5006	RFC WITH BEADS				3A RI5.8X6.4-2	L1020732		1-	A	C2
J 5001	CONNECTOR				U.FL-R-SMT(10)	P1091155		1-	A	A3
J 5003	CONNECTOR				IMSA-9202B-1-02-T	P0091174		1-	A	A3
J 5005	CONNECTOR				IMSA-9202B-1-02-T	P0091174		1-	A	A3
J 5011	CONNECTOR				U.FL-R-SMT(10)	P1091155		1-	A	D1
J 5012	CONNECTOR				B2B-ZR(LF)(SN)	P0090647		1-	A	A5
J 5016	CONNECTOR				30FLT-SM2-TB(LF)(SN)(M)	P1091142		1-	A	B5
J 5017	TERMINAL				P43	S5000412		1-	A	D5
J 5018	TERMINAL				P43	S5000412		1-	A	D5
J 5020	CONNECTOR				B2B-ZR(LF)(SN)	P0090647		1-	A	A5
JP5001	WIRE ASSY				GRA 30 */* QEV	T9318351		1-	A	E2
L 5001	CHIP COIL	39uH		5%	NLV25T-390J-PF	L1691443		1-	A	A3
L 5003	CHIP COIL	39uH		5%	NLV25T-390J-PF	L1691443		1-	A	A1
L 5004	M.RFC	10uH			CDRH74-100MC	L1690599		1-	A	A2
L 5005	TOROIDAL COIL	6uH			N8C T10.9X5.8X4.7	L0023192		1-	A	B2
L 5006	M.RFC	1000uH			LLM3225-102J	L1691157		1-	A	E3
L 5007	M.RFC	1000uH			LLM3225-102J	L1691157		1-	A	E2
L 5008	TOROIDAL COIL	260uH			260U 3A RI9.3-4.8-5	L0022767A		1-	A	E2
L 5009	TOROIDAL COIL	0.18uH			0.18U T50-10	L0022978		1-	A	D1
L 5010	TOROIDAL COIL	1.39uH			1.39U T50-6	L0022970		1-	A	D2
L 5011	TOROIDAL COIL	0.383uH			ERLA224	L0023232		1-	A	C3
L 5012	TOROIDAL COIL	0.42uH			0.42U T50-6	L0022971		1-	A	C4
L 5013	TOROIDAL COIL	0.34uH			0.34U T50-6	L0022977		1-	A	D3
L 5013	TOROIDAL COIL	0.305uH			ERLA220	L0023296		19-	A	D3
L 5014	TOROIDAL COIL	3.77uH			3.770U T50-2	L0021405		1-	A	D2
L 5015	TOROIDAL COIL	1.75uH			ERLA229	L0023216		1-	A	C4
L 5016	TOROIDAL COIL	0.18uH			0.18U T50-10	L0022978		1-	A	D2
L 5017	TOROIDAL COIL	1.04uH			ERLA227	L0023256		1-	A	D3
L 5018	TOROIDAL COIL	0.5uH			0.50U T50-6	L0022975		1-	A	D3
L 5018	TOROIDAL COIL	0.44uH			ERLA222	L0023294		19-	A	D3
L 5019	TOROIDAL COIL	0.4uH			0.40U T50-6	L0022974		1-	A	D4
L 5020	TOROIDAL COIL	0.25uH			0.25U T50-6	L0022976		1-	A	D3
L 5020	TOROIDAL COIL	0.21uH			ERLA218	L0023298		19-	A	D3
L 5021	TOROIDAL COIL	2.94uH			2.940U T50-2	L0021406		1-	A	D2
L 5022	TOROIDAL COIL	1.13uH			ERLA228	L0023246		1-	A	D4
L 5023	TOROIDAL COIL	0.18uH			0.18U T50-10	L0022978		1-	A	E2
L 5024	TOROIDAL COIL	1.04uH			ERLA227	L0023256		1-	A	E3
L 5025	TOROIDAL COIL	0.578uH			ERLA225	L0023234		1-	A	E4
L 5026	TOROIDAL COIL	0.34uH			0.34U T50-6	L0022977		1-	A	D4
L 5026	TOROIDAL COIL	0.305uH			ERLA220	L0023296		19-	A	D4
L 5027	TOROIDAL COIL	0.25uH			0.25U T50-6	L0022976		1-	A	D3
L 5027	TOROIDAL COIL	0.21uH			ERLA218	L0023298		19-	A	D3

REF	DESCRIPTION	VALUE	V/W	TOL.	MFR'S DESIG	YAESU P/N	VERS.	LOT	SIDE	LAY ADR
L 5028	M.RFC	22uH			RCR875DNP-220L	L1190397		1-	A	D1
L 5029	M.RFC	120uH			RCH-875 121K	L1190396		1-	A	E1
L 5030	CHIP COIL	0.12uH		2%	C2520C-R12G-RA	L1691295		1-	A	E1
P 5001	CONNECTOR				IMSA-9206H-T	P1090988		1-		
P 5002	CONNECTOR				IMSA-9206H-T	P1090988		1-		
Q 5003	FET				RD01MUS1-T113	G3070321		1-	A	A2
Q 5004	TRANSISTOR				2SC4081 T106	G3340818		1-	A	B4
Q 5005	TRANSISTOR				2SC4081 T106	G3340818		1-	A	B4
Q 5006	TRANSISTOR				2SC4081 T106	G3340818		1-	A	B4
Q 5007	TRANSISTOR				2SB1143S	G3211430S		1-	A	B4
Q 5008	TRANSISTOR				2SA812-T2B M5B	G3108127E		1-	A	B4
Q 5009	FET				RD15HVF1	G3070326		1-	A	A1
Q 5011	TRANSISTOR				UMD5N TR	G3070343		1-	A	A3
Q 5013	IC				KIA7808API	G1093164		1-	A	A5
Q 5014	TRANSISTOR				UMD5N TR	G3070343		1-	A	B4
Q 5015	TRANSISTOR				UMD5N TR	G3070343		1-	A	B4
Q 5016	TRANSISTOR				DTC123JE TL	G3070323		1-	A	B4
Q 5017	TRANSISTOR				UMD5N TR	G3070343		1-	A	B5
Q 5018	FET				RD100HHF1-101	G3090151		1-	A	B1
Q 5019	FET				RD100HHF1-101	G3090151		1-	A	B2
Q 5020	TRANSISTOR				UMD5N TR	G3070343		1-	A	B4
Q 5021	TRANSISTOR				UMD5N TR	G3070343		1-	A	B5
Q 5022	TRANSISTOR				UMD5N TR	G3070343		1-	A	B5
Q 5023	TRANSISTOR				UMD5N TR	G3070343		1-	A	B4
Q 5024	TRANSISTOR				2SC4081 T106	G3340818		1-	A	B4
Q 5025	IC				TA75S01F(TE85R.F)	G1091593		1-	A	B4
Q 5026	TRANSISTOR				2SB1182-TLQ	G3070063		1-	A	B3
Q 5027	TRANSISTOR				DTD123YK T146	G3070157		1-	A	B4
Q 5028	TRANSISTOR				UMD5N TR	G3070343		1-	A	B4
Q 5029	TRANSISTOR				UMD5N TR	G3070343		1-	A	B5
Q 5030	IC				LM2902PWR	G1094009		1-	A	B3
Q 5031	TRANSISTOR				2SC4081 T106	G3340818		1-	A	B3
R 5001	CHIP RES.	270	1/16W	5%	RMC1/16 271JATP	J24185271		1-	A	A3
R 5002	CHIP RES.	18	1/16W	5%	RMC1/16 180JATP	J24185180		1-	A	A3
R 5003	CHIP RES.	270	1/16W	5%	RMC1/16 271JATP	J24185271		1-	A	A3
R 5009	CHIP RES.	4.7k	1/16W	5%	RMC1/16 472JATP	J24185472		1-	A	A3
R 5010	CHIP RES.	6.8k	1/16W	5%	RMC1/16 682JATP	J24185682		1-	A	A3
R 5014	CHIP RES.	1k	1/16W	5%	RMC1/16 102JATP	J24185102		1-	A	A3
R 5015	CHIP RES.	56	1/16W	5%	RMC1/16 560JATP	J24185560		1-	A	A3
R 5016	CHIP RES.	1k	1/16W	5%	RMC1/16 102JATP	J24185102		1-	A	A2
R 5017	CHIP RES.	100k	1/16W	1%	RMC1/16 104FTP	J24183104		1-	A	B3
R 5018	CHIP RES.	1k	1/16W	5%	RMC1/16 102JATP	J24185102		1-	A	B4
R 5019	CHIP RES.	0	1/16W	5%	RMC1/16 000JATP	J24185000		1-	A	B5
R 5021	CHIP RES.	3.3k	1/16W	1%	RMC1/16 332FTP	J24183332		1-	A	B3
R 5022	CHIP RES.	10	1/16W	5%	RMC1/16 100JATP	J24185100		1-	A	A2
R 5023	CHIP RES.	180	1/16W	1%	RMC1/16 181FTP	J24183181		1-	A	B3
R 5025	CHIP RES.	10k	1/16W	5%	RMC1/16 103JATP	J24185103		1-	A	B4
R 5026	CHIP RES.	2.2k	1/16W	5%	RMC1/16 222JATP	J24185222		1-	A	B4
R 5027	CHIP RES.	470	1/10W	5%	RMC1/10T 471J	J24205471		1-	A	A2
R 5029	CHIP RES.	10k	1/16W	1%	RMC1/16 103FTP	J24183103		1-	A	B3
R 5030	CHIP RES.	3.9k	1/16W	1%	RMC1/16 392FTP	J24183392		1-	A	B4
R 5031	CHIP RES.	1k	1/16W	1%	RMC1/16 102FTP	J24183102		1-	A	B4
R 5032	CHIP RES.	6.8k	1/16W	1%	RMC1/16 682FTP	J24183682		1-	A	B3
R 5033	CHIP RES.	33k	1/16W	1%	RMC1/16 333FTP	J24183333		1-	A	B4
R 5034	CHIP RES.	6.8k	1/16W	1%	RMC1/16 682FTP	J24183682		1-	A	B3
R 5035	CHIP RES.	33k	1/16W	1%	RMC1/16 333FTP	J24183333		1-	A	B3
R 5039	CHIP RES.	100	1/4W	5%	RMC1/4 101JATP	J24245101		1-	A	B4
R 5040	CHIP RES.	100	1/4W	5%	RMC1/4 101JATP	J24245101		1-	A	B4
R 5042	CHIP RES.	100	1/10W	5%	RMC1/10T 101J	J24205101		1-	A	A2
R 5043	CHIP RES.	1k	1/16W	5%	RMC1/16 102JATP	J24185102		1-	A	A2
R 5044	CHIP RES.	100	1/4W	5%	RMC1/4 101JATP	J24245101		1-	A	B4
R 5045	CHIP RES.	220	1/16W	5%	RMC1/16 221JATP	J24185221		1-	A	A1
R 5049	CHIP RES.	10	1/16W	5%	RMC1/16 100JATP	J24185100		1-	A	A2
R 5050	CHIP RES.	1k	1/16W	5%	RMC1/16 102JATP	J24185102		1-	A	A4
R 5056	CHIP RES.	0.33	1W	10%	RMC1 R33KATE	J24309001		1-	A	A4
R 5057	CHIP RES.	470	1/2W	5%	RMC1/2 471JCTP	J24275471		1-	A	A2
R 5060	CHIP RES.	1k	1/4W	5%	RMC1/4 102JATP	J24245102		1-	A	A3
R 5063	CHIP RES.	1.5	1W	5%	RMC1 1R5JTE	J24305159		1-	A	B1
R 5064	CHIP RES.	1.5	1W	5%	RMC1 1R5JTE	J24305159		1-	A	B2
R 5065	CHIP RES.	100	1/10W	5%	RMC1/10T 101J	J24205101		1-	A	B3
R 5066	CHIP RES.	100	1/10W	5%	RMC1/10T 101J	J24205101		1-	A	A3
R 5067	CHIP RES.	22	1W	5%	RMC1 220JTE	J24305220		1-	A	B2
R 5068	CHIP RES.	22	1W	5%	RMC1 220JTE	J24305220		1-	A	B1
R 5070	CHIP RES.	100	1/10W	5%	RMC1/10T 101J	J24205101		1-	A	B1
R 5071	CHIP RES.	100	1/10W	5%	RMC1/10T 101J	J24205101		1-	A	A1

REF	DESCRIPTION	VALUE	V/W	TOL.	MFR'S DESIG	YAESU P/N	VERS.	LOT	SIDE	LAY ADR
R 5073	CHIP RES.	22	1W	5%	RMC1 220JTE	J24305220		1-	B	d1
R 5076	CHIP RES.	1k	1/4W	5%	RMC1/4 102JATP	J24245102		1-	A	B1
R 5077	CHIP RES.	1k	1/4W	5%	RMC1/4 102JATP	J24245102		1-	A	B3
R 5078	CHIP RES.	0.003	2W		TLR3AWDTE3L00F	J24339066		1-	A	C4
R 5079	CHIP RES.	22	1W	5%	RMC1 220JTE	J24305220		1-	B	d2
R 5080	CHIP RES.	22	1W	5%	RMC1 220JTE	J24305220		1-	B	d1
R 5081	CHIP RES.	10k	1/10W	0.1%	RR1220P-103-B	J24209098		1-	A	C4
R 5082	CHIP RES.	22	1W	5%	RMC1 220JTE	J24305220		1-	B	d2
R 5083	CHIP RES.	1.5k	1/10W	0.1%	RR1220P-152-B	J24209078		1-	A	B4
R 5084	CHIP RES.	10k	1/16W	1%	RMC1/16 103FTP	J24183103		1-	A	B4
R 5085	CHIP RES.	10k	1/16W	5%	RMC1/16 103JATP	J24185103		1-	A	B4
R 5086	CHIP RES.	10k	1/16W	5%	RMC1/16 103JATP	J24185103		1-	A	B4
R 5087	CHIP RES.	1.5k	1/10W	0.1%	RR1220P-152-B	J24209078		1-	A	C4
R 5088	CHIP RES.	33k	1/16W	1%	RMC1/16 333FTP	J24183333		1-	A	B4
R 5089	CHIP RES.	0	1/16W	5%	RMC1/16 000JATP	J24185000		1-	A	B4
R 5090	CHIP RES.	0	1/16W	5%	RMC1/16 000JATP	J24185000		1-	A	B4
R 5091	CHIP RES.	470k	1/16W	5%	RMC1/16 474JATP	J24185474		1-	A	B4
R 5092	CHIP RES.	180k	1/10W	0.5%	RR1220P-184-D-C	J24209225		1-	A	B4
R 5093	CHIP RES.	1.5k	1/10W	0.1%	RR1220P-152-B	J24209078		1-	A	B4
R 5094	CHIP RES.	10k	1/10W	0.1%	RR1220P-103-B	J24209098		1-	A	C4
R 5095	CHIP RES.	1.5k	1/10W	0.1%	RR1220P-152-B	J24209078		1-	A	C4
R 5096	CHIP RES.	1.5k	1/16W	1%	RMC1/16 152FTP	J24183152		1-	A	B4
R 5097	CHIP RES.	5.6k	1/16W	1%	RMC1/16 562FTP	J24183562		1-	A	B4
R 5099	CHIP RES.	180k	1/10W	0.5%	RR1220P-184-D-C	J24209225		1-	A	B4
R 5100	CHIP RES.	4.7k	1/16W	5%	RMC1/16 472JATP	J24185472		1-	A	B4
R 5101	CHIP RES.	1k	1/16W	5%	RMC1/16 102JATP	J24185102		1-	A	B4
R 5102	CHIP RES.	47	1/16W	5%	RMC1/16 470JATP	J24185470		1-	A	D1
R 5103	CHIP RES.	47	1/16W	5%	RMC1/16 470JATP	J24185470		1-	A	D1
R 5104	CHIP RES.	47	1/16W	5%	RMC1/16 470JATP	J24185470		1-	A	C3
R 5105	CHIP RES.	47	1/16W	5%	RMC1/16 470JATP	J24185470		1-	A	D2
R 5106	CHIP RES.	47	1/16W	5%	RMC1/16 470JATP	J24185470		1-	A	C3
R 5107	CHIP RES.	47	1/16W	5%	RMC1/16 470JATP	J24185470		1-	A	C3
R 5108	CHIP RES.	47	1/16W	5%	RMC1/16 470JATP	J24185470		1-	A	C3
R 5109	CHIP RES.	2.7k	1/16W	1%	RMC1/16 272FTP	J24183272		1-	A	E3
R 5110	CHIP RES.	2.7k	1/16W	1%	RMC1/16 272FTP	J24183272		1-	B	a2
R 5111	CHIP RES.	3.3k	1/16W	1%	RMC1/16 332FTP	J24183332		1-	A	E3
R 5112	CHIP RES.	3.3k	1/16W	1%	RMC1/16 332FTP	J24183332		1-	A	E2
R 5113	CHIP RES.	47	1W	5%	RMC1 470JTE	J24305470		1-	B	a2
R 5114	CHIP RES.	47	1W	5%	RMC1 470JTE	J24305470		1-	B	a2
R 5115	CHIP RES.	100	1/16W	5%	RMC1/16 101JATP	J24185101		1-	B	a1
R 5117	CHIP RES.	1	1/4W	5%	RMC1/4 1R0JATP	J24245010		1-	A	A4
R 5122	CHIP RES.	270k	1/16W	1%	RMC1/16 274FTP	J24183274		1-	A	B3
R 5123	CHIP RES.	10k	1/16W	1%	RMC1/16 103FTP	J24183103		1-	A	B3
R 5124	CHIP RES.	47k	1/16W	1%	RMC1/16 473FTP	J24183473		1-	A	B3
R 5125	CHIP RES.	1k	1/16W	1%	RMC1/16 102FTP	J24183102		1-	A	B3
R 5128	CHIP RES.	2.2k	1/16W	5%	RMC1/16 222JATP	J24185222		1-	A	B3
R 5129	CHIP RES.	0	1/16W	5%	RMC1/16 000JATP	J24185000		1-	A	B3
R 5130	CHIP RES.	6.8k	1/16W	1%	RMC1/16 682FTP	J24183682		1-	A	B3
R 5131	CHIP RES.	470	1/16W	1%	RMC1/16 471FTP	J24183471		1-	A	B3
RL5001	RELAY		DC12V		ACP331 DC12V	M1190175		1-	A	C4
RL5002	RELAY		DC12V		FTR-B4SA012Z-B05	M1190209		1-	A	D1
RL5003	RELAY		DC12V		FTR-B4SA012Z-B05	M1190209		1-	A	D1
RL5004	RELAY		DC12V		FTR-B4SA012Z-B05	M1190209		1-	A	C3
RL5005	RELAY		DC12V		FTR-B4SA012Z-B05	M1190209		1-	A	D2
RL5006	RELAY		DC12V		FTR-B4SA012Z-B05	M1190209		1-	A	C3
RL5007	RELAY		DC12V		FTR-B4SA012Z-B05	M1190209		1-	A	C3
RL5008	RELAY		DC12V		FTR-B4SA012Z-B05	M1190209		1-	A	D3
RL5009	RELAY		DC12V		AGQ200A12Z DC12V	M1190188		1-	A	E1
RL5010	RELAY		DC12V		FTR-B4SA012Z-B05	M1190209		1-	A	E2
RL5011	RELAY		DC12V		FTR-B4SA012Z-B05	M1190209		1-	A	E3
RL5012	RELAY		DC12V		FTR-B4SA012Z-B05	M1190209		1-	A	E4
RL5013	RELAY		DC12V		FTR-B4SA012Z-B05	M1190209		1-	A	E3
RL5014	RELAY		DC12V		FTR-B4SA012Z-B05	M1190209		1-	A	E4
RL5015	RELAY		DC12V		FTR-B4SA012Z-B05	M1190209		1-	A	E4
RL5016	RELAY		DC12V		FTR-B4SA012Z-B05	M1190209		1-	A	E3
T 5001	TOROIDAL COIL	5.1uH			ERL9608	L0023250		1-	A	C5
T 5002	BALUN TRANSFOMER$				070812735D	L0023046		1-	A	A2
T 5003	COIL PWR-WIDE				3A5 RIB10X20X10 1T/1T	L0023282		1-	A	B2
T 5004	COIL PWR-WIDE				4D4 RIB16	L0023113		1-	A	D2
TC5001	TRIMMER CAP.	20pF			TZB4R200AA10R00	K91000217		1-	A	E2
TH5001	THERMISTOR				ERTJ0ER103J	G9090119		1-	A	A3
TH5003	THERMISTOR				ERTJ0ER103J	G9090119		1-	A	B3
VR5001	POT.	2.2k			EVM3VSX50BE3	J51843222		1-	A	A3
VR5001	POT.	2.2k			VG039NCHXTB222	J51846222		16-	A	A3
VR5002	POT.	2.2k			EVM3VSX50BE3	J51843222		1-	A	A2

REF	DESCRIPTION	VALUE	V/W	TOL.	MFR'S DESIG	YAESU P/N	VERS.	LOT	SIDE	LAY ADR
VR5002	POT.	2.2k			VG039NCHXTB222	J51846222		16-	A	A2
VR5003	POT.	2.2k			EVM3VSX50BE3	J51843222		1-	A	A3
VR5003	POT.	2.2k			VG039NCHXTB222	J51846222		16-	A	A3
VR5004	POT.	2.2k			EVM3VSX50BE3	J51843222		1-	A	A1
VR5004	POT.	2.2k			VG039NCHXTB222	J51846222		16-	A	A1
	SHIELD CASE				(19x25)	RA6068800		1-		

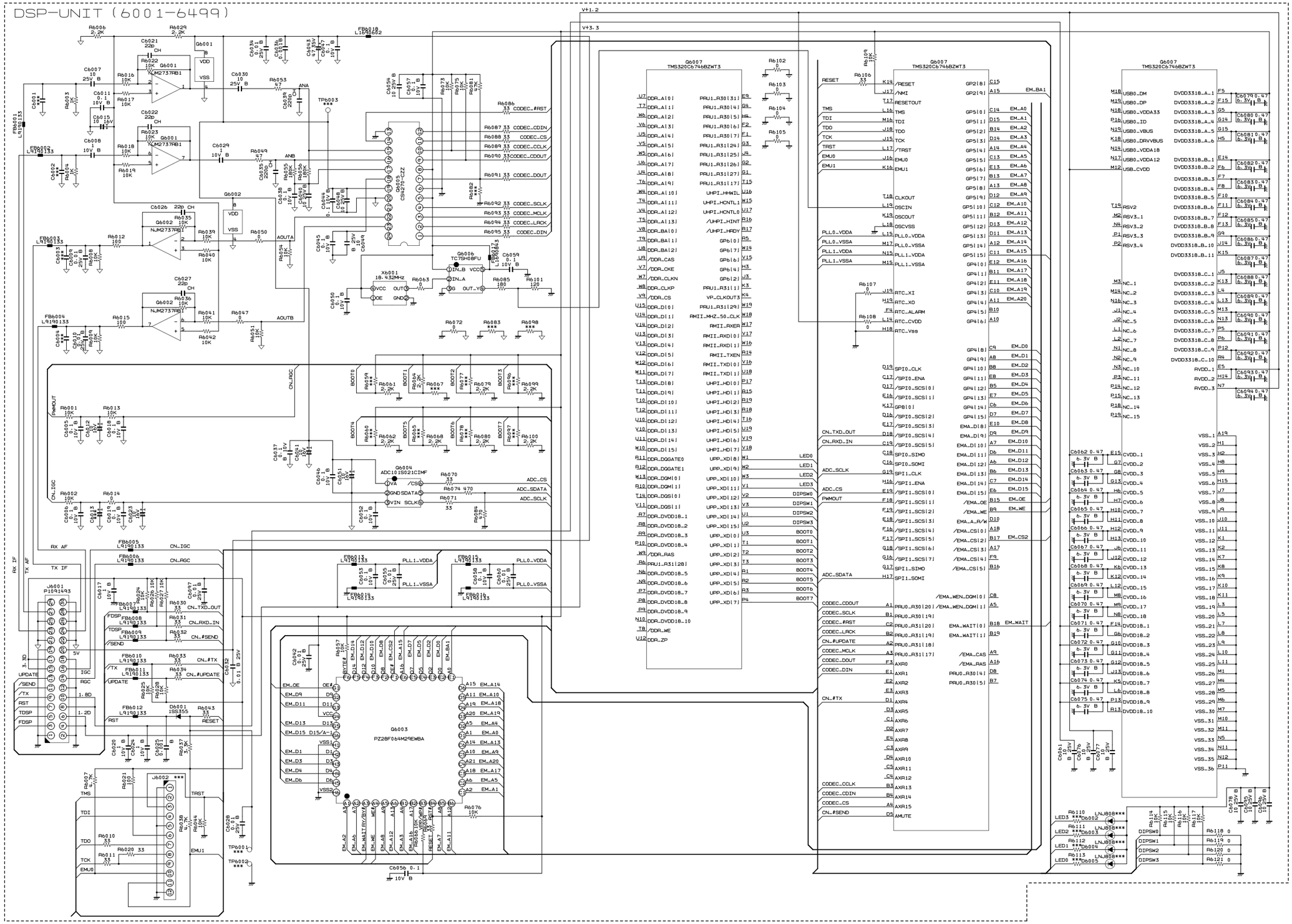
DSP-UNIT (6001-6499)
Q6007
TMS320C6746BZWT3
Q6003
PZ28F064M29EWBA
Q6005
CS4270-CZZ
Q6006
TC7SH08FU
X6001
18.432MHz
Q6004
ADC101S021CIMF
J6001
P1041443
J6002
V+1.2
V+3.3
RX IF
TX IF
RX AF
TX AF
CN_IGC
CN_RGC
CODEC_#RST
CODEC_CDIN
CODEC_CS
CODEC_CCLK
CODEC_CDOUT
CODEC_DOUT
CODEC_SCLK
CODEC_MCLK
CODEC_LRCK
CODEC_DIN
ADC_CS
ADC_SDATA
ADC_SCLK
PLL1_VDDA
PLL1_VSSA
PLL0_VDDA
PLL0_VSSA
EM_BA1
EM_WAIT
EM_CAS
EM_RAS
EMU0
EMU1
TRST
TMS
TDI
TDO
TCK
UPDATE
SEND
TX
RST
TDSP
FDSP
IGC
RGC
1.8D
1.2D
3.3D
5V
RESET
CN_#TX
CN_#UPDATE
CN_#SEND
CN_TXD_OUT
CN_RXD_IN
AOUTA
AOUTB
ANA
ANB
PWMOUT
BOOT0
BOOT1
BOOT2
BOOT3
BOOT4
BOOT5
BOOT6
BOOT7
DIPSW0
DIPSW1
DIPSW2
DIPSW3
LED0
LED1
LED2
LED3

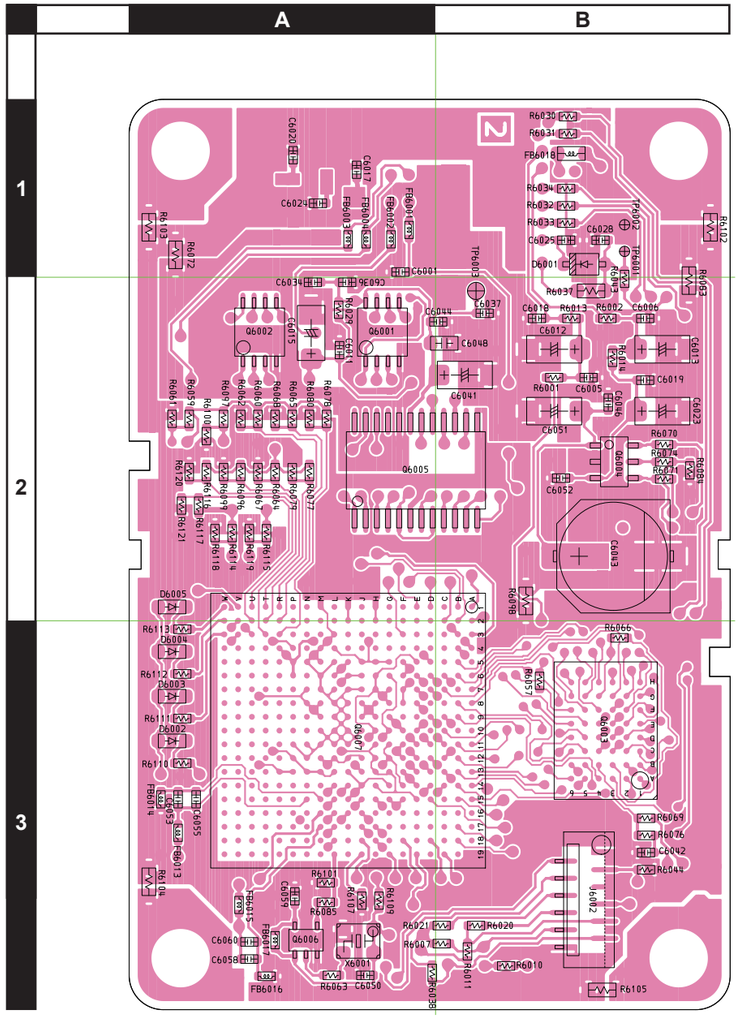

side A

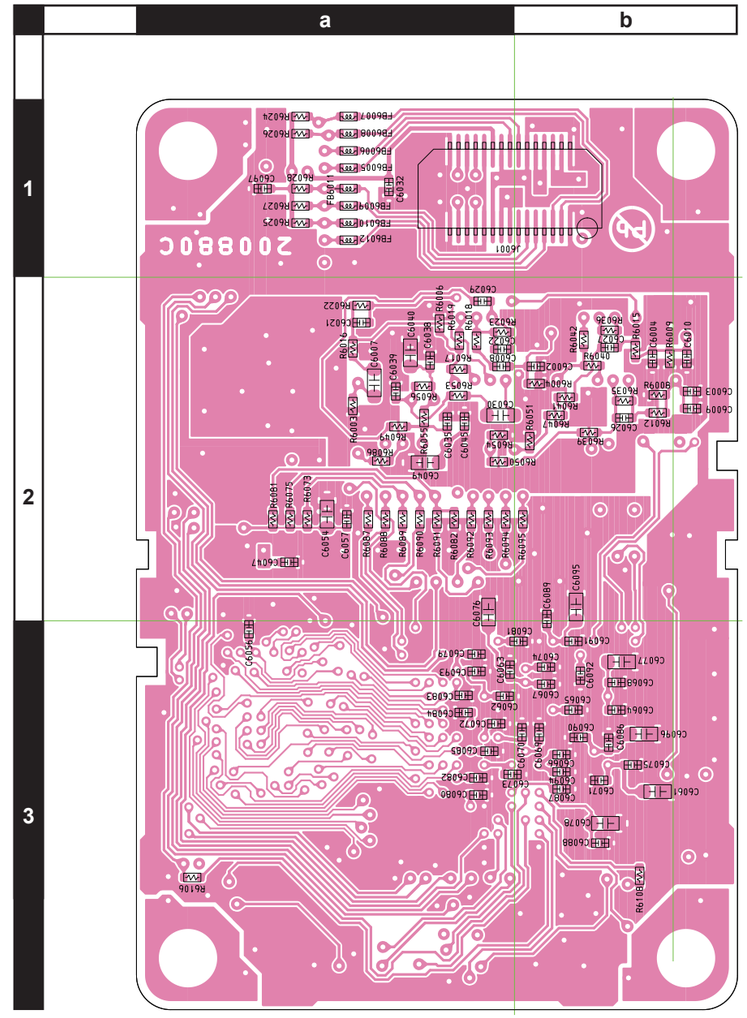

side B

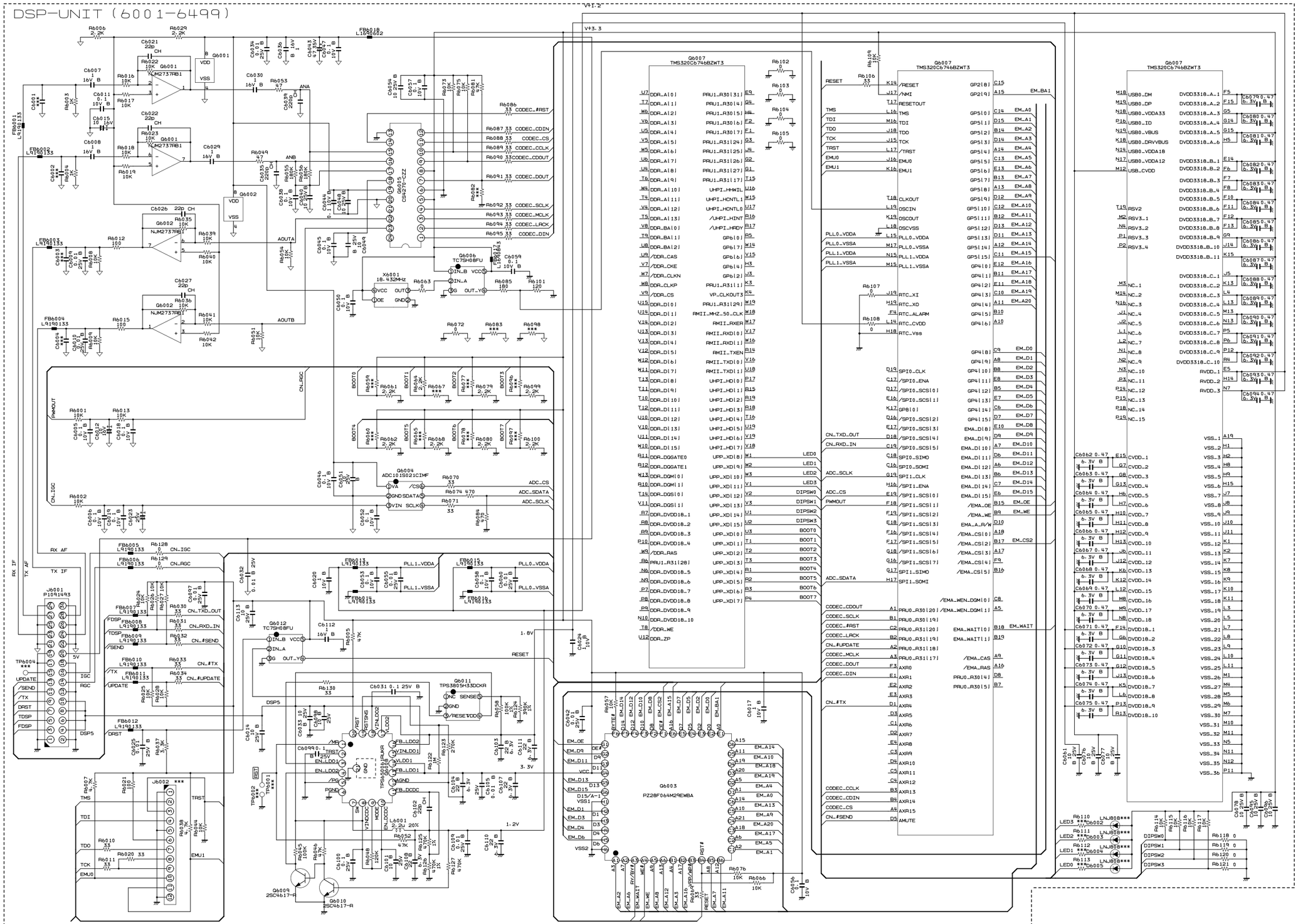
DSP-UNIT (6001-6499)
Q6007
TMS320C6746BZWT3
Q6003
PZ28F064M29EWBA
Q6005
CSW270-C2Z
Q6004
ADC101S021CIMF
Q6006
TC7SH08FU
Q6012
TC7SH08FU
Q6011
TPS3805H33DCKR
Q6009
2SC4617-R
Q6010
2SC4617-R
X6001
18.432MHz
J6001
P1091493
J6002
J6004
J6005
J6006
J6007
J6008
J6009
J6010
J6011
J6012
J6013
J6014
J6015
J6016
J6017
J6018
J6019
J6020
J6021
J6022
J6023
J6024
J6025
J6026
J6027
J6028
J6029
J6030
J6031
J6032
J6033
J6034
J6035
J6036
J6037
J6038
J6039
J6040
J6041
J6042
J6043
J6044
J6045
J6046
J6047
J6048
J6049
J6050
J6051
J6052
J6053
J6054
J6055
J6056
J6057
J6058
J6059
J6060
J6061
J6062
J6063
J6064
J6065
J6066
J6067
J6068
J6069
J6070
J6071
J6072
J6073
J6074
J6075
J6076
J6077
J6078
J6079
J6080
J6081
J6082
J6083
J6084
J6085
J6086
J6087
J6088
J6089
J6090
J6091
J6092
J6093
J6094
J6095
J6096
J6097
J6098
J6099
J6100
J6101
J6102
J6103
J6104
J6105
J6106
J6107
J6108
J6109
J6110
J6111
J6112
J6113
J6114
J6115
J6116
J6117
J6118
J6119
J6120
J6121
J6122
J6123
J6124
J6125
J6126
J6127
J6128
J6129
J6130
J6131
J6132
J6133
J6134
J6135
J6136
J6137
J6138
J6139
J6140
J6141
J6142
J6143
J6144
J6145
J6146
J6147
J6148
J6149
J6150
J6151
J6152
J6153
J6154
J6155
J6156
J6157
J6158
J6159
J6160
J6161
J6162
J6163
J6164
J6165
J6166
J6167
J6168
J6169
J6170
J6171
J6172
J6173
J6174
J6175
J6176
J6177
J6178
J6179
J6180
J6181
J6182
J6183
J6184
J6185
J6186
J6187
J6188
J6189
J6190
J6191
J6192
J6193
J6194
J6195
J6196
J6197
J6198
J6199
J6200
J6201
J6202
J6203
J6204
J6205
J6206
J6207
J6208
J6209
J6210
J6211
J6212
J6213
J6214
J6215
J6216
J6217
J6218
J6219
J6220
J6221
J6222
J6223
J6224
J6225
J6226
J6227
J6228
J6229
J6230
J6231
J6232
J6233
J6234
J6235
J6236
J6237
J6238
J6239
J6240
J6241
J6242
J6243
J6244
J6245
J6246
J6247
J6248
J6249
J6250
J6251
J6252
J6253
J6254
J6255
J6256
J6257
J6258
J6259
J6260
J6261
J6262
J6263
J6264
J6265
J6266
J6267
J6268
J6269
J6270
J6271
J6272
J6273
J6274
J6275
J6276
J6277
J6278
J6279
J6280
J6281
J6282
J6283
J6284
J6285
J6286
J6287
J6288
J6289
J6290
J6291
J6292
J6293
J6294
J6295
J6296
J6297
J6298
J6299
J6300
J6301
J6302
J6303
J6304
J6305
J6306
J6307
J6308
J6309
J6310
J6311
J6312
J6313
J6314
J6315
J6316
J6317
J6318
J6319
J6320
J6321
J6322
J6323
J6324
J6325
J6326
J6327
J6328
J6329
J6330
J6331
J6332
J6333
J6334
J6335
J6336
J6337
J6338
J6339
J6340
J6341
J6342
J6343
J6344
J6345
J6346
J6347
J6348
J6349
J6350
J6351
J6352
J6353
J6354
J6355
J6356
J6357
J6358
J6359
J6360
J6361
J6362
J6363
J6364
J6365
J6366
J6367
J6368
J6369
J6370
J6371
J6372
J6373
J6374
J6375
J6376
J6377
J6378
J6379
J6380
J6381
J6382
J6383
J6384
J6385
J6386
J6387
J6388
J6389
J6390
J6391
J6392
J6393
J6394
J6395
J6396
J6397
J6398
J6399
J6400
J6401
J6402
J6403
J6404
J6405
J6406
J6407
J6408
J6409
J6410
J6411
J6412
J6413
J6414
J6415
J6416
J6417
J6418
J6419
J6420
J6421
J6422
J6423
J6424
J6425
J6426
J6427
J6428
J6429
J6430
J6431
J6432
J6433
J6434
J6435
J6436
J6437
J6438
J6439
J6440
J6441
J6442
J6443
J6444
J6445
J6446
J6447
J6448
J6449
J6450
J6451
J6452
J6453
J6454
J6455
J6456
J6457
J6458
J6459
J6460
J6461
J6462
J6463
J6464
J6465
J6466
J6467
J6468
J6469
J6470
J6471
J6472
J6473
J6474
J6475
J6476
J6477
J6478
J6479
J6480
J6481
J6482
J6483
J6484
J6485
J6486
J6487
J6488
J6489
J6490
J6491
J6492
J6493
J6494
J6495
J6496
J6497
J6498
J6499
V+1.2
V+3.3
1.8V
1.2V
3.3V
5V
RESET
CODEC_#RST
CODEC_CDIN
CODEC_CS
CODEC_CCLK
CODEC_CDOUT
CODEC_DOUT
CODEC_SCLK
CODEC_MCLK
CODEC_LRCK
CODEC_DIN
AOUTA
AOUTB
ADC_CS
ADC_SDATA
ADC_SCLK
CN_IGC
CN_RGC
CN_TXD_OUT
CN_RXD_IN
CN_#SEND
CN_#TX
CN_#UPDATE
PLL1_VDDA
PLL1_VSSA
PLL0_VDDA
PLL0_VSSA
RX AF
TX AF
RX IF
TX IF
DSP5
EM_BA1
EM_WAIT
EM_CS2
EM_OE
EM_WE
EM_D0
EM_D1
EM_D2
EM_D3
EM_D4
EM_D5
EM_D6
EM_D7
EM_D8
EM_D9
EM_D10
EM_D11
EM_D12
EM_D13
EM_D14
EM_D15
EM_A0
EM_A1
EM_A2
EM_A3
EM_A4
EM_A5
EM_A6
EM_A7
EM_A8
EM_A9
EM_A10
EM_A11
EM_A12
EM_A13
EM_A14
EM_A15
EM_A16
EM_A17
EM_A18
EM_A19
EM_A20
EM_A21
EM_A22
EM_A23
EM_A24
EM_A25
EM_A26
EM_A27
EM_A28
EM_A29
EM_A30
EM_A31
EM_CAS
EM_RAS
EM_WE
EM_OE
EM_WAIT
EM_CS2
EM_BA1

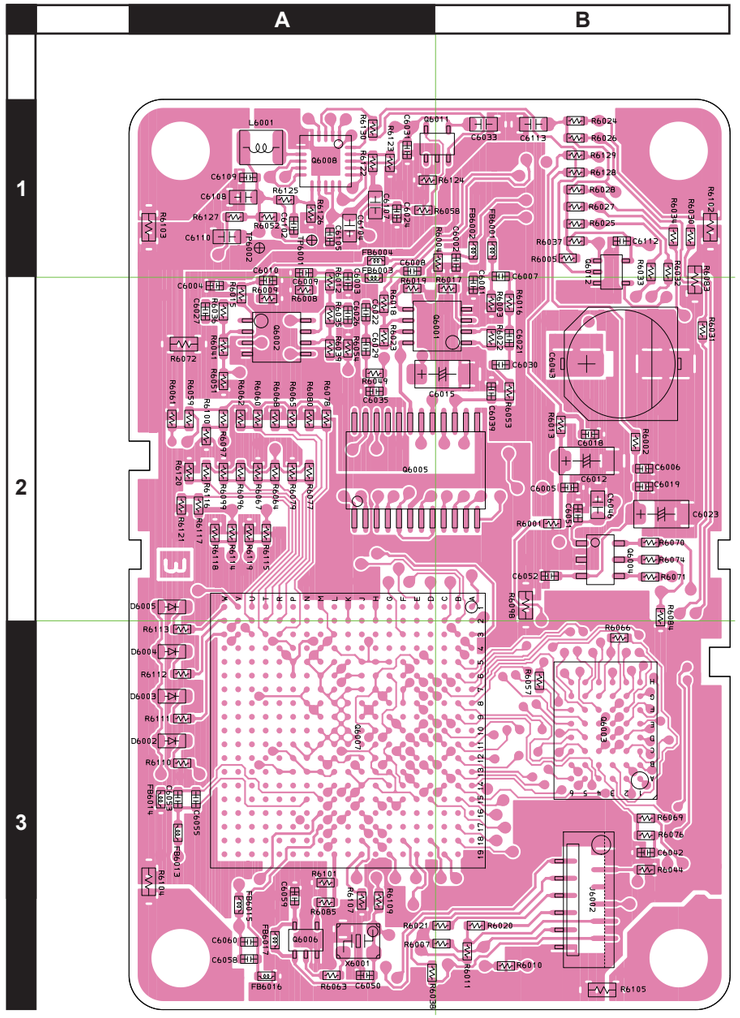

side A

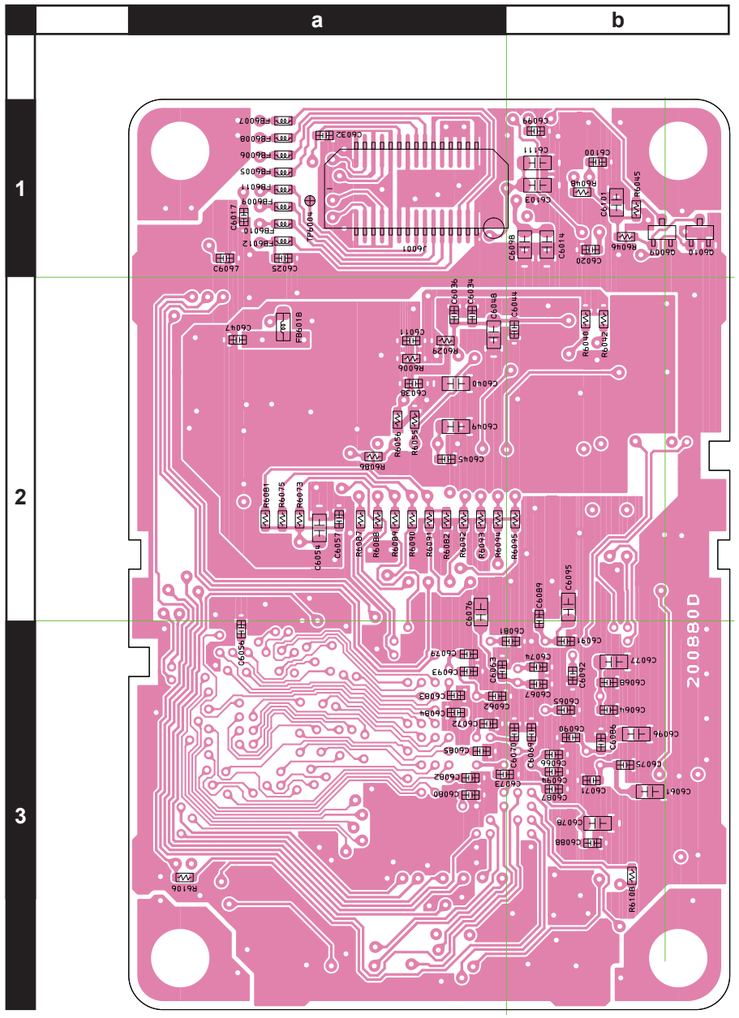

side B

REF	DESCRIPTION	VALUE	V/W	TOL.	MFR'S DESIG	YAESU P/N	VERS.	LOT	SIDE	LAY ADR
	PCB with Components (with SHIELD CASE: RA6078900)					CS2462501		1-10		
						CS2462502		11-		
C 6005	CHIP CAP.	0.1uF	10V	B	GRM155B11A104KA01D	K22108802		1-	A	B2
C 6006	CHIP CAP.	0.1uF	10V	B	GRM155B11A104KA01D	K22108802		1-	A	B2
C 6007	CHIP CAP.	10uF	25V	B	GRM188R61E106MA73D	K22144818		1-	A	B2
C 6007	CHIP CAP.	1uF	16V	B	GRM155B31C105KA12D	K22128817		11-	A	B2
C 6008	CHIP CAP.	1uF	10V	B	GRM155B31A105KE15D	K22108809		1-	A	A2
C 6008	CHIP CAP.	1uF	16V	B	GRM155B31C105KA12D	K22128817		11-	A	A2
C 6009	CHIP CAP.	0.01uF	25V	B	GRM155B11E103KA01D	K22148834		1-	A	A2
C 6010	CHIP CAP.	0.01uF	25V	B	GRM155B11E103KA01D	K22148834		1-	A	A2
C 6011	CHIP CAP.	0.1uF	10V	B	GRM155B11A104KA01D	K22108802		1-	B	a2
C 6012	CHIP TA.CAP.	10uF	16V		TMCMA1C106MTRF	K78120077		1-	A	B2
C 6014	CHIP CAP.	10uF	25V	B	GRM188R61E106MA73D	K22144818		11-	B	b1
C 6014	CHIP CAP.	10uF	10V	B	GRM188B31A106ME69D	K22104810		14-	B	b1
C 6015	CHIP TA.CAP.	10uF	16V		TMCMA1C106MTRF	K78120077		1-	A	B2
C 6017	CHIP CAP.	1uF	10V	B	GRM155B31A105KE15D	K22108809		1-	B	a1
C 6018	CHIP CAP.	0.1uF	10V	B	GRM155B11A104KA01D	K22108802		1-	A	B2
C 6019	CHIP CAP.	0.1uF	10V	B	GRM155B11A104KA01D	K22108802		1-	A	B2
C 6020	CHIP CAP.	1uF	10V	B	GRM155B31A105KE15D	K22108809		1-	B	b1
C 6021	CHIP CAP.	22pF	50V	CH	GRM1552C1H220JA01D	K22178220		1-	A	B2
C 6022	CHIP CAP.	22pF	50V	CH	GRM1552C1H220JA01D	K22178220		1-	A	A2
C 6023	CHIP TA.CAP.	10uF	16V		TMCMA1C106MTRF	K78120077		1-	A	B2
C 6023	CHIP TA.CAP.	1uF	25V		TMCMA1E105MTRF	K78140013		11-	A	B2
C 6024	CHIP CAP.	1uF	10V	B	GRM155B31A105KE15D	K22108809		1-	A	A1
C 6025	CHIP CAP.	0.001uF	50V	B	GRM155B11H102KA01D	K22178809		1-	B	a1
C 6025	CHIP CAP.	0.01uF	25V	B	GRM155B11E103KA01D	K22148834		11-	B	a1
C 6026	CHIP CAP.	22pF	50V	CH	GRM1552C1H220JA01D	K22178220		1-	A	A2
C 6027	CHIP CAP.	22pF	50V	CH	GRM1552C1H220JA01D	K22178220		1-	A	A2
C 6028	CHIP CAP.	0.01uF	25V	B	GRM155B11E103KA01D	K22148834		1-10		
C 6029	CHIP CAP.	1uF	10V	B	GRM155B31A105KE15D	K22108809		1-	A	A2
C 6029	CHIP CAP.	1uF	16V	B	GRM155B31C105KA12D	K22128817		11-	A	A2
C 6030	CHIP CAP.	10uF	25V	B	GRM188R61E106MA73D	K22144818		1-	A	B2
C 6030	CHIP CAP.	1uF	16V	B	GRM155B31C105KA12D	K22128817		11-	A	B2
C 6031	CHIP CAP.	0.1uF	25V	B	GRM155B31E104KA87D	K22148838		11-	A	A1
C 6032	CHIP CAP.	0.01uF	25V	B	GRM155B11E103KA01D	K22148834		1-	B	a1
C 6033	CHIP CAP.	10uF	25V	B	GRM188R61E106MA73D	K22144818		11-	A	B1
C 6033	CHIP CAP.	10uF	10V	B	GRM188B31A106ME69D	K22104810		14-	A	B1
C 6034	CHIP CAP.	0.01uF	25V	B	GRM155B11E103KA01D	K22148834		1-	B	a2
C 6035	CHIP CAP.	220pF	50V	CH	GRM1552C1H221JA01D	K22179713		1-	A	A2
C 6036	CHIP CAP.	0.001uF	50V	B	GRM155B11H102KA01D	K22178809		1-	B	a2
C 6036	CHIP CAP.	1uF	16V	B	GRM155B31C105KA12D	K22128817		11-	B	a2
C 6037	CHIP CAP.	0.1uF	10V	B	GRM155B11A104KA01D	K22108802		1-10		
C 6038	CHIP CAP.	0.1uF	10V	B	GRM155B11A104KA01D	K22108802		1-	B	a2
C 6039	CHIP CAP.	220pF	50V	CH	GRM1552C1H221JA01D	K22179713		1-	A	B2
C 6040	CHIP CAP.	10uF	25V	B	GRM188R61E106MA73D	K22144818		1-	B	a2
C 6040	CHIP CAP.	10uF	10V	B	GRM188B31A106ME69D	K22104810		14-	B	a2
C 6041	CHIP TA.CAP.	10uF	16V		TMCMA1C106MTRF	K78120077		1-10		
C 6042	CHIP CAP.	0.01uF	25V	B	GRM155B11E103KA01D	K22148834		1-	A	B3
C 6043	AL.ELECTRO.CAP.	47uF	35V		EEE1VA470WP	K48160005		1-	A	B2
C 6044	CHIP CAP.	0.1uF	10V	B	GRM155B11A104KA01D	K22108802		1-	B	b2
C 6045	CHIP CAP.	0.1uF	10V	B	GRM155B11A104KA01D	K22108802		1-	B	a2
C 6046	CHIP CAP.	0.1uF	10V	B	GRM155B11A104KA01D	K22108802		1-	A	B2
C 6047	CHIP CAP.	0.1uF	10V	B	GRM155B11A104KA01D	K22108802		1-	B	a2
C 6048	CHIP CAP.	10uF	25V	B	GRM188R61E106MA73D	K22144818		1-	B	a2
C 6048	CHIP CAP.	10uF	10V	B	GRM188B31A106ME69D	K22104810		14-	B	a2
C 6049	CHIP CAP.	10uF	25V	B	GRM188R61E106MA73D	K22144818		1-	B	a2
C 6049	CHIP CAP.	10uF	10V	B	GRM188B31A106ME69D	K22104810		14-	B	a2
C 6050	CHIP CAP.	0.1uF	10V	B	GRM155B11A104KA01D	K22108802		1-	A	A3
C 6051	CHIP TA.CAP.	10uF	16V		TMCMA1C106MTRF	K78120077		1-	A	B2
C 6051	CHIP CAP.	10uF	25V	B	GRM188R61E106MA73D	K22144818		11-	A	B2
C 6051	CHIP CAP.	10uF	10V	B	GRM188B31A106ME69D	K22104810		14-	A	B2
C 6052	CHIP CAP.	0.1uF	10V	B	GRM155B11A104KA01D	K22108802		1-	A	B2
C 6053	CHIP CAP.	0.1uF	10V	B	GRM155B11A104KA01D	K22108802		1-	A	A3
C 6054	CHIP CAP.	10uF	25V	B	GRM188R61E106MA73D	K22144818		1-	B	a2
C 6054	CHIP CAP.	10uF	10V	B	GRM188B31A106ME69D	K22104810		14-	B	a2
C 6055	CHIP CAP.	0.01uF	25V	B	GRM155B11E103KA01D	K22148834		1-	A	A3
C 6056	CHIP CAP.	0.1uF	10V	B	GRM155B11A104KA01D	K22108802		1-	B	a3
C 6057	CHIP CAP.	0.1uF	10V	B	GRM155B11A104KA01D	K22108802		1-	B	a2
C 6058	CHIP CAP.	0.1uF	10V	B	GRM155B11A104KA01D	K22108802		1-	A	A3
C 6059	CHIP CAP.	0.1uF	10V	B	GRM155B11A104KA01D	K22108802		1-	A	A3
C 6060	CHIP CAP.	0.01uF	25V	B	GRM155B11E103KA01D	K22148834		1-	A	A3
C 6061	CHIP CAP.	10uF	25V	B	GRM188R61E106MA73D	K22144818		1-	B	b3
C 6061	CHIP CAP.	10uF	10V	B	GRM188B31A106ME69D	K22104810		14-	B	b3
C 6062	CHIP CAP.	0.47uF	6.3V	B	GRM155B30J474KE18D	K22088802		1-	B	a3
C 6063	CHIP CAP.	0.47uF	6.3V	B	GRM155B30J474KE18D	K22088802		1-	B	a3

REF	DESCRIPTION	VALUE	V/W	TOL.	MFR'S DESIG	YAESU P/N	VERS.	LOT	SIDE	LAY ADR
C 6064	CHIP CAP.	0.47uF	6.3V	B	GRM155B30J474KE18D	K22088802		1-	B	b3
C 6065	CHIP CAP.	0.47uF	6.3V	B	GRM155B30J474KE18D	K22088802		1-	B	b3
C 6066	CHIP CAP.	0.47uF	6.3V	B	GRM155B30J474KE18D	K22088802		1-	B	b3
C 6067	CHIP CAP.	0.47uF	6.3V	B	GRM155B30J474KE18D	K22088802		1-	B	b3
C 6068	CHIP CAP.	0.47uF	6.3V	B	GRM155B30J474KE18D	K22088802		1-	B	b3
C 6069	CHIP CAP.	0.47uF	6.3V	B	GRM155B30J474KE18D	K22088802		1-	B	b3
C 6070	CHIP CAP.	0.47uF	6.3V	B	GRM155B30J474KE18D	K22088802		1-	B	b3
C 6071	CHIP CAP.	0.47uF	6.3V	B	GRM155B30J474KE18D	K22088802		1-	B	b3
C 6072	CHIP CAP.	0.47uF	6.3V	B	GRM155B30J474KE18D	K22088802		1-	B	a3
C 6073	CHIP CAP.	0.47uF	6.3V	B	GRM155B30J474KE18D	K22088802		1-	B	a3
C 6074	CHIP CAP.	0.47uF	6.3V	B	GRM155B30J474KE18D	K22088802		1-	B	b3
C 6075	CHIP CAP.	0.47uF	6.3V	B	GRM155B30J474KE18D	K22088802		1-	B	b3
C 6076	CHIP CAP.	10uF	25V	B	GRM188R61E106MA73D	K22144818		1-	B	a2
C 6076	CHIP CAP.	10uF	10V	B	GRM188B31A106ME69D	K22104810		14-	B	a2
C 6077	CHIP CAP.	10uF	25V	B	GRM188R61E106MA73D	K22144818		1-	B	b3
C 6077	CHIP CAP.	10uF	10V	B	GRM188B31A106ME69D	K22104810		14-	B	b3
C 6078	CHIP CAP.	10uF	25V	B	GRM188R61E106MA73D	K22144818		1-	B	b3
C 6078	CHIP CAP.	10uF	10V	B	GRM188B31A106ME69D	K22104810		14-	B	b3
C 6079	CHIP CAP.	0.47uF	6.3V	B	GRM155B30J474KE18D	K22088802		1-	B	a3
C 6080	CHIP CAP.	0.47uF	6.3V	B	GRM155B30J474KE18D	K22088802		1-	B	a3
C 6081	CHIP CAP.	0.47uF	6.3V	B	GRM155B30J474KE18D	K22088802		1-	B	b3
C 6082	CHIP CAP.	0.47uF	6.3V	B	GRM155B30J474KE18D	K22088802		1-	B	a3
C 6083	CHIP CAP.	0.47uF	6.3V	B	GRM155B30J474KE18D	K22088802		1-	B	a3
C 6084	CHIP CAP.	0.47uF	6.3V	B	GRM155B30J474KE18D	K22088802		1-	B	a3
C 6085	CHIP CAP.	0.47uF	6.3V	B	GRM155B30J474KE18D	K22088802		1-	B	a3
C 6086	CHIP CAP.	0.47uF	6.3V	B	GRM155B30J474KE18D	K22088802		1-	B	b3
C 6087	CHIP CAP.	0.47uF	6.3V	B	GRM155B30J474KE18D	K22088802		1-	B	b3
C 6088	CHIP CAP.	0.47uF	6.3V	B	GRM155B30J474KE18D	K22088802		1-	B	b3
C 6089	CHIP CAP.	0.47uF	6.3V	B	GRM155B30J474KE18D	K22088802		1-	B	b3
C 6090	CHIP CAP.	0.47uF	6.3V	B	GRM155B30J474KE18D	K22088802		1-	B	b3
C 6091	CHIP CAP.	0.47uF	6.3V	B	GRM155B30J474KE18D	K22088802		1-	B	b3
C 6092	CHIP CAP.	0.47uF	6.3V	B	GRM155B30J474KE18D	K22088802		1-	B	b3
C 6093	CHIP CAP.	0.47uF	6.3V	B	GRM155B30J474KE18D	K22088802		1-	B	a3
C 6094	CHIP CAP.	0.47uF	6.3V	B	GRM155B30J474KE18D	K22088802		1-	B	b3
C 6095	CHIP CAP.	10uF	25V	B	GRM188R61E106MA73D	K22144818		1-	B	b2
C 6095	CHIP CAP.	10uF	10V	B	GRM188B31A106ME69D	K22104810		14-	B	b2
C 6096	CHIP CAP.	10uF	25V	B	GRM188R61E106MA73D	K22144818		1-	B	b3
C 6096	CHIP CAP.	10uF	10V	B	GRM188B31A106ME69D	K22104810		14-	B	b3
C 6097	CHIP CAP.	0.01uF	25V	B	GRM155B11E103KA01D	K22148834		1-	B	a1
C 6098	CHIP CAP.	10uF	25V	B	GRM188R61E106MA73D	K22144818		11-	B	b1
C 6098	CHIP CAP.	10uF	10V	B	GRM188B31A106ME69D	K22104810		14-	B	b1
C 6099	CHIP CAP.	0.1uF	25V	B	GRM155B31E104KA87D	K22148838		11-	B	b1
C 6100	CHIP CAP.	0.1uF	25V	B	GRM155B31E104KA87D	K22148838		11-	B	b1
C 6101	CHIP CAP.	10uF	25V	B	GRM188R61E106MA73D	K22144818		11-	B	b1
C 6101	CHIP CAP.	10uF	10V	B	GRM188B31A106ME69D	K22104810		14-	B	b1
C 6102	CHIP CAP.	22pF	50V	CH	GRM1552C1H220JA01D	K22178220		11-	A	A1
C 6103	CHIP CAP.	22uF	6.3V	B	GRM188R60J226MEA0D	K22084807		11-	B	b1
C 6104	CHIP CAP.	22uF	6.3V	B	GRM188R60J226MEA0D	K22084807		11-	A	A1
C 6105	CHIP CAP.	0.01uF	25V	B	GRM155B11E103KA01D	K22148834		11-	A	A1
C 6107	CHIP CAP.	22uF	6.3V	B	GRM188R60J226MEA0D	K22084807		11-	A	A1
C 6108	CHIP CAP.	22uF	6.3V	B	GRM188R60J226MEA0D	K22084807		11-	A	A1
C 6109	CHIP CAP.	0.01uF	25V	B	GRM155B11E103KA01D	K22148834		11-	A	A1
C 6110	CHIP CAP.	22uF	6.3V	B	GRM188R60J226MEA0D	K22084807		11-	A	A1
C 6111	CHIP CAP.	22uF	6.3V	B	GRM188R60J226MEA0D	K22084807		11-	B	b1
C 6112	CHIP CAP.	1uF	16V	B	GRM155B31C105KA12D	K22128817		11-	A	B1
C 6113	CHIP CAP.	10uF	25V	B	GRM188R61E106MA73D	K22144818		11-	A	B1
C 6113	CHIP CAP.	10uF	10V	B	GRM188B31A106ME69D	K22104810		14-	A	B1
D 6001	DIODE				1SS355 TE-17	G2070470		1-10		
FB6001	FERRITE BEADS				BLM15BD102SN1D	L9190133		1-	A	B1
FB6002	FERRITE BEADS				BLM15BD102SN1D	L9190133		1-	A	B1
FB6003	FERRITE BEADS				BLM15BD102SN1D	L9190133		1-	A	A2
FB6004	FERRITE BEADS				BLM15BD102SN1D	L9190133		1-	A	A1
FB6005	FERRITE BEADS				BLM15BD102SN1D	L9190133		1-	B	a1
FB6006	FERRITE BEADS				BLM15BD102SN1D	L9190133		1-	B	a1
FB6007	FERRITE BEADS				BLM15BD102SN1D	L9190133		1-	B	a1
FB6008	FERRITE BEADS				BLM15BD102SN1D	L9190133		1-	B	a1
FB6009	FERRITE BEADS				BLM15BD102SN1D	L9190133		1-	B	a1
FB6010	FERRITE BEADS				BLM15BD102SN1D	L9190133		1-	B	a1
FB6011	FERRITE BEADS				BLM15BD102SN1D	L9190133		1-	B	a1
FB6012	FERRITE BEADS				BLM15BD102SN1D	L9190133		1-	B	a1
FB6013	FERRITE BEADS				BLM15BD102SN1D	L9190133		1-	A	A3
FB6014	FERRITE BEADS				BLM15BD102SN1D	L9190133		1-	A	A3
FB6015	FERRITE BEADS				BLM15BD102SN1D	L9190133		1-	A	A3
FB6016	FERRITE BEADS				BLM15BD102SN1D	L9190133		1-	A	A3
FB6017	FERRITE BEADS				BLM15AG121SN1D	L1690843		1-	A	A3

REF	DESCRIPTION	VALUE	V/W	TOL.	MFR'S DESIG	YAESU P/N	VERS.	LOT	SIDE	LAY ADR
FB6018	FERRITE BEADS				BLM18BD182SN1D	L1690602		1-	B	a2
J 6001	CONNECTOR				AXK5S30047YG	P1091493		1-	B	a1
L 6001	CHIP COIL	2.2uH		20%	LQM2HPN2R2MGHL	L1691986		11-	A	A1
Q 6001	IC				NJM2737RB1-TE1	G1095244		1-	A	A2
Q 6001	IC				NJM2732RB1-TE1	G1095540		19-	A	A2
Q 6002	IC				NJM2737RB1-TE1	G1095244		1-	A	A2
Q 6002	IC				NJM2732RB1-TE1	G1095540		19-	A	A2
Q 6003	IC				PZ28F064M29EWBA YR2090	G1095298		1-	A	B3
Q 6004	IC				ADC101S021CIMF	G1095071		1-	A	B2
Q 6005	IC				CS4270-CZZ	G1094482		1-	A	A2
Q 6006	IC				TC7SH08FU(TE85L.JF)	G1094736		1-	A	A3
Q 6007	IC				TMS320C6746EZWT3	G1095068		1-	A	A3
Q 6008	IC				TPS650061RUKR	G1095070		11-	A	A1
Q 6009	TRANSISTOR				2SC4617 TL R	G3346178R		11-	B	b1
Q 6010	TRANSISTOR				2SC4617 TL R	G3346178R		11-	B	b1
Q 6011	IC				TPS3805H33DCKR	G1095072		11-	A	A1
Q 6012	IC				TC7SH08FU(TE85L.JF)	G1094736		11-	A	B2
R 6001	CHIP RES.	10k	1/16W	5%	RMC1/16S 103JTH	J24189037		1-	A	B2
R 6002	CHIP RES.	10k	1/16W	5%	RMC1/16S 103JTH	J24189037		1-	A	B2
R 6003	CHIP RES.	1k	1/16W	5%	RMC1/16S 102JTH	J24189025		1-	A	B2
R 6004	CHIP RES.	1k	1/16W	5%	RMC1/16S 102JTH	J24189025		1-	A	B1
R 6005	CHIP RES.	47k	1/16W	5%	RMC1/16S 473JTH	J24189045		11-	A	B1
R 6006	CHIP RES.	2.2k	1/16W	5%	RMC1/16S 222JTH	J24189029		1-	B	a2
R 6007	CHIP RES.	4.7k	1/16W	5%	RMC1/16S 472JTH	J24189033		1-	A	B3
R 6008	CHIP RES.	10k	1/16W	5%	RMC1/16S 103JTH	J24189037		1-	A	A2
R 6009	CHIP RES.	10k	1/16W	5%	RMC1/16S 103JTH	J24189037		1-	A	A2
R 6010	CHIP RES.	33	1/16W	5%	RMC1/16S 330JTH	J24189007		1-	A	B3
R 6011	CHIP RES.	33	1/16W	5%	RMC1/16S 330JTH	J24189007		1-	A	B3
R 6012	CHIP RES.	100	1/16W	5%	RMC1/16S 101JTH	J24189013		1-	A	A2
R 6013	CHIP RES.	10k	1/16W	5%	RMC1/16S 103JTH	J24189037		1-	A	B2
R 6014	CHIP RES.	0	1/16W	5%	RMC1/16S JPTH	J24189070		1-10		
R 6015	CHIP RES.	100	1/16W	5%	RMC1/16S 101JTH	J24189013		1-	A	A2
R 6016	CHIP RES.	10k	1/16W	5%	RMC1/16S 103JTH	J24189037		1-	A	B2
R 6017	CHIP RES.	10k	1/16W	5%	RMC1/16S 103JTH	J24189037		1-	A	B2
R 6018	CHIP RES.	10k	1/16W	5%	RMC1/16S 103JTH	J24189037		1-	A	A2
R 6019	CHIP RES.	10k	1/16W	5%	RMC1/16S 103JTH	J24189037		1-	A	A2
R 6020	CHIP RES.	33	1/16W	5%	RMC1/16S 330JTH	J24189007		1-	A	B3
R 6021	CHIP RES.	100	1/16W	5%	RMC1/16S 101JTH	J24189013		1-	A	B3
R 6022	CHIP RES.	10k	1/16W	5%	RMC1/16S 103JTH	J24189037		1-	A	B2
R 6023	CHIP RES.	10k	1/16W	5%	RMC1/16S 103JTH	J24189037		1-	A	A2
R 6024	CHIP RES.	10k	1/16W	5%	RMC1/16S 103JTH	J24189037		1-	A	B1
R 6025	CHIP RES.	10k	1/16W	5%	RMC1/16S 103JTH	J24189037		1-	A	B1
R 6026	CHIP RES.	10k	1/16W	5%	RMC1/16S 103JTH	J24189037		1-	A	B1
R 6027	CHIP RES.	10k	1/16W	5%	RMC1/16S 103JTH	J24189037		1-	A	B1
R 6028	CHIP RES.	10k	1/16W	5%	RMC1/16S 103JTH	J24189037		1-	A	B1
R 6029	CHIP RES.	2.2k	1/16W	5%	RMC1/16S 222JTH	J24189029		1-	B	a2
R 6030	CHIP RES.	33	1/16W	5%	RMC1/16S 330JTH	J24189007		1-	A	B1
R 6031	CHIP RES.	33	1/16W	5%	RMC1/16S 330JTH	J24189007		1-	A	B2
R 6032	CHIP RES.	33	1/16W	5%	RMC1/16S 330JTH	J24189007		1-	A	B2
R 6033	CHIP RES.	33	1/16W	5%	RMC1/16S 330JTH	J24189007		1-	A	B2
R 6034	CHIP RES.	33	1/16W	5%	RMC1/16S 330JTH	J24189007		1-	A	B1
R 6035	CHIP RES.	10k	1/16W	5%	RMC1/16S 103JTH	J24189037		1-	A	A2
R 6036	CHIP RES.	10k	1/16W	5%	RMC1/16S 103JTH	J24189037		1-	A	A2
R 6037	CHIP RES.	3.3k	1/16W	5%	RMC1/16 332JATP	J24185332		1-	A	B1
R 6037	CHIP RES.	3.3k	1/16W	5%	RMC1/16S 332JTH	J24189031		11-	A	B1
R 6038	CHIP RES.	4.7k	1/16W	5%	RMC1/16S 472JTH	J24189033		1-	A	A3
R 6039	CHIP RES.	10k	1/16W	5%	RMC1/16S 103JTH	J24189037		1-	A	A2
R 6040	CHIP RES.	10k	1/16W	5%	RMC1/16S 103JTH	J24189037		1-	B	b2
R 6041	CHIP RES.	10k	1/16W	5%	RMC1/16S 103JTH	J24189037		1-	A	A2
R 6042	CHIP RES.	10k	1/16W	5%	RMC1/16S 103JTH	J24189037		1-	B	b2
R 6043	CHIP RES.	33	1/16W	5%	RMC1/16S 330JTH	J24189007		1-10		
R 6044	CHIP RES.	10k	1/16W	5%	RMC1/16S 103JTH	J24189037		1-	A	B3
R 6045	CHIP RES.	100k	1/16W	5%	RMC1/16S 104JTH	J24189049		11-	B	b1
R 6046	CHIP RES.	47k	1/16W	5%	RMC1/16S 473JTH	J24189045		11-	B	b1
R 6047	CHIP RES.	0	1/16W	5%	RMC1/16S JPTH	J24189070		1-10		
R 6048	CHIP RES.	120k	1/16W	5%	RMC1/16S 124JTH	J24189050		11-	B	b1
R 6049	CHIP RES.	47	1/16W	5%	RMC1/16S 470JTH	J24189009		1-	A	A2
R 6050	CHIP RES.	0	1/16W	5%	RMC1/16S JPTH	J24189070		1-10		
R 6051	CHIP RES.	10k	1/16W	5%	RMC1/16S 103JTH	J24189037		1-	A	A2
R 6052	CHIP RES.	47k	1/16W	5%	RMC1/16S 473JTH	J24189045		11-	A	A1
R 6053	CHIP RES.	47	1/16W	5%	RMC1/16S 470JTH	J24189009		1-	A	B2
R 6054	CHIP RES.	10k	1/16W	5%	RMC1/16S 103JTH	J24189037		1-	A	A2
R 6055	CHIP RES.	180k	1/16W	5%	RMC1/16S 184JTH	J24189052		1-	B	a2
R 6056	CHIP RES.	180k	1/16W	5%	RMC1/16S 184JTH	J24189052		1-	B	a2
R 6057	CHIP RES.	10k	1/16W	5%	RMC1/16S 103JTH	J24189037		1-	A	B3

REF	DESCRIPTION	VALUE	V/W	TOL.	MFR'S DESIG	YAESU P/N	VERS.	LOT	SIDE	LAY ADR
R 6058	CHIP RES.	100k	1/16W	1%	RMC1/16SK104FTH	J24189529		11-	A	A1
R 6061	CHIP RES.	2.2k	1/16W	5%	RMC1/16S 222JTH	J24189029		1-	A	A2
R 6062	CHIP RES.	2.2k	1/16W	5%	RMC1/16S 222JTH	J24189029		1-	A	A2
R 6063	CHIP RES.	0	1/16W	5%	RMC1/16S JPTH	J24189070		1-	A	A3
R 6064	CHIP RES.	2.2k	1/16W	5%	RMC1/16S 222JTH	J24189029		1-	A	A2
R 6066	CHIP RES.	10k	1/16W	5%	RMC1/16S 103JTH	J24189037		1-	A	B3
R 6068	CHIP RES.	2.2k	1/16W	5%	RMC1/16S 222JTH	J24189029		1-	A	A2
R 6069	CHIP RES.	33	1/16W	5%	RMC1/16S 330JTH	J24189007		1-	A	B3
R 6070	CHIP RES.	33	1/16W	5%	RMC1/16S 330JTH	J24189007		1-	A	B2
R 6071	CHIP RES.	33	1/16W	5%	RMC1/16S 330JTH	J24189007		1-	A	B2
R 6072	CHIP RES.	0	1/16W	5%	RMC1/16 000JATP	J24185000		1-	A	A2
R 6073	CHIP RES.	10k	1/16W	5%	RMC1/16S 103JTH	J24189037		1-	B	a2
R 6074	CHIP RES.	470	1/16W	5%	RMC1/16S 471JTH	J24189021		1-	A	B2
R 6075	CHIP RES.	10k	1/16W	5%	RMC1/16S 103JTH	J24189037		1-	B	a2
R 6076	CHIP RES.	10k	1/16W	5%	RMC1/16S 103JTH	J24189037		1-	A	B3
R 6079	CHIP RES.	2.2k	1/16W	5%	RMC1/16S 222JTH	J24189029		1-	A	A2
R 6080	CHIP RES.	2.2k	1/16W	5%	RMC1/16S 222JTH	J24189029		1-	A	A2
R 6081	CHIP RES.	47k	1/16W	5%	RMC1/16S 473JTH	J24189045		1-	B	a2
R 6084	CHIP RES.	470	1/16W	5%	RMC1/16S 471JTH	J24189021		1-	A	B3
R 6085	CHIP RES.	180	1/16W	5%	RMC1/16S 181JTH	J24189016		1-	A	A3
R 6086	CHIP RES.	33	1/16W	5%	RMC1/16S 330JTH	J24189007		1-	B	a2
R 6087	CHIP RES.	33	1/16W	5%	RMC1/16S 330JTH	J24189007		1-	B	a2
R 6088	CHIP RES.	33	1/16W	5%	RMC1/16S 330JTH	J24189007		1-	B	a2
R 6089	CHIP RES.	33	1/16W	5%	RMC1/16S 330JTH	J24189007		1-	B	a2
R 6090	CHIP RES.	33	1/16W	5%	RMC1/16S 330JTH	J24189007		1-	B	a2
R 6091	CHIP RES.	33	1/16W	5%	RMC1/16S 330JTH	J24189007		1-	B	a2
R 6092	CHIP RES.	33	1/16W	5%	RMC1/16S 330JTH	J24189007		1-	B	a2
R 6093	CHIP RES.	33	1/16W	5%	RMC1/16S 330JTH	J24189007		1-	B	a2
R 6094	CHIP RES.	33	1/16W	5%	RMC1/16S 330JTH	J24189007		1-	B	a2
R 6095	CHIP RES.	33	1/16W	5%	RMC1/16S 330JTH	J24189007		1-	B	b2
R 6099	CHIP RES.	2.2k	1/16W	5%	RMC1/16S 222JTH	J24189029		1-	A	A2
R 6100	CHIP RES.	2.2k	1/16W	5%	RMC1/16S 222JTH	J24189029		1-	A	A2
R 6101	CHIP RES.	120	1/16W	5%	RMC1/16S 121JTH	J24189014		1-	A	A3
R 6102	CHIP RES.	0	1/16W	5%	RMC1/16 000JATP	J24185000		1-	A	B1
R 6103	CHIP RES.	0	1/16W	5%	RMC1/16 000JATP	J24185000		1-	A	A1
R 6104	CHIP RES.	0	1/16W	5%	RMC1/16 000JATP	J24185000		1-	A	A3
R 6105	CHIP RES.	0	1/16W	5%	RMC1/16 000JATP	J24185000		1-	A	B3
R 6106	CHIP RES.	33	1/16W	5%	RMC1/16S 330JTH	J24189007		1-	B	a3
R 6107	CHIP RES.	0	1/16W	5%	RMC1/16S JPTH	J24189070		1-	A	A3
R 6108	CHIP RES.	0	1/16W	5%	RMC1/16S JPTH	J24189070		1-	B	b3
R 6109	CHIP RES.	10k	1/16W	5%	RMC1/16S 103JTH	J24189037		1-	A	A3
R 6114	CHIP RES.	10k	1/16W	5%	RMC1/16S 103JTH	J24189037		1-	A	A2
R 6115	CHIP RES.	10k	1/16W	5%	RMC1/16S 103JTH	J24189037		1-	A	A2
R 6116	CHIP RES.	10k	1/16W	5%	RMC1/16S 103JTH	J24189037		1-	A	A2
R 6117	CHIP RES.	10k	1/16W	5%	RMC1/16S 103JTH	J24189037		1-	A	A2
R 6118	CHIP RES.	0	1/16W	5%	RMC1/16S JPTH	J24189070		1-	A	A2
R 6119	CHIP RES.	0	1/16W	5%	RMC1/16S JPTH	J24189070		1-	A	A2
R 6120	CHIP RES.	0	1/16W	5%	RMC1/16S JPTH	J24189070		1-	A	A2
R 6121	CHIP RES.	0	1/16W	5%	RMC1/16S JPTH	J24189070		1-	A	A2
R 6122	CHIP RES.	1M	1/16W	5%	RMC1/16S 105JTH	J24189061		11-	A	A1
R 6123	CHIP RES.	270k	1/16W	5%	RMC1/16S 274JTH	J24189054		11-	A	A1
R 6124	CHIP RES.	390k	1/16W	1%	RMC1/16SK394FTH	J24189536		11-	A	A1
R 6125	CHIP RES.	470k	1/16W	1%	RMC1/16SK474FTH	J24189537		11-	A	A1
R 6126	CHIP RES.	470k	1/16W	1%	RMC1/16SK474FTH	J24189537		11-	A	A1
R 6127	CHIP RES.	470k	1/16W	5%	RMC1/16S 474JTH	J24189057		11-	A	A1
R 6128	CHIP RES.	0	1/16W	5%	RMC1/16S JPTH	J24189070		11-	A	B1
R 6129	CHIP RES.	0	1/16W	5%	RMC1/16S JPTH	J24189070		11-	A	B1
R 6130	CHIP RES.	33	1/16W	5%	RMC1/16S 330JTH	J24189007		11-	A	A1
X 6001	SPXO	18.432MHz			DSO221SWAH 18.432MHZ	H0103452		1-	A	A3
	SHIELD CASE COVER				(DSP)	RA6078700		1-		
	SHIELD CASE				(33x41)	RA6078900		1-		

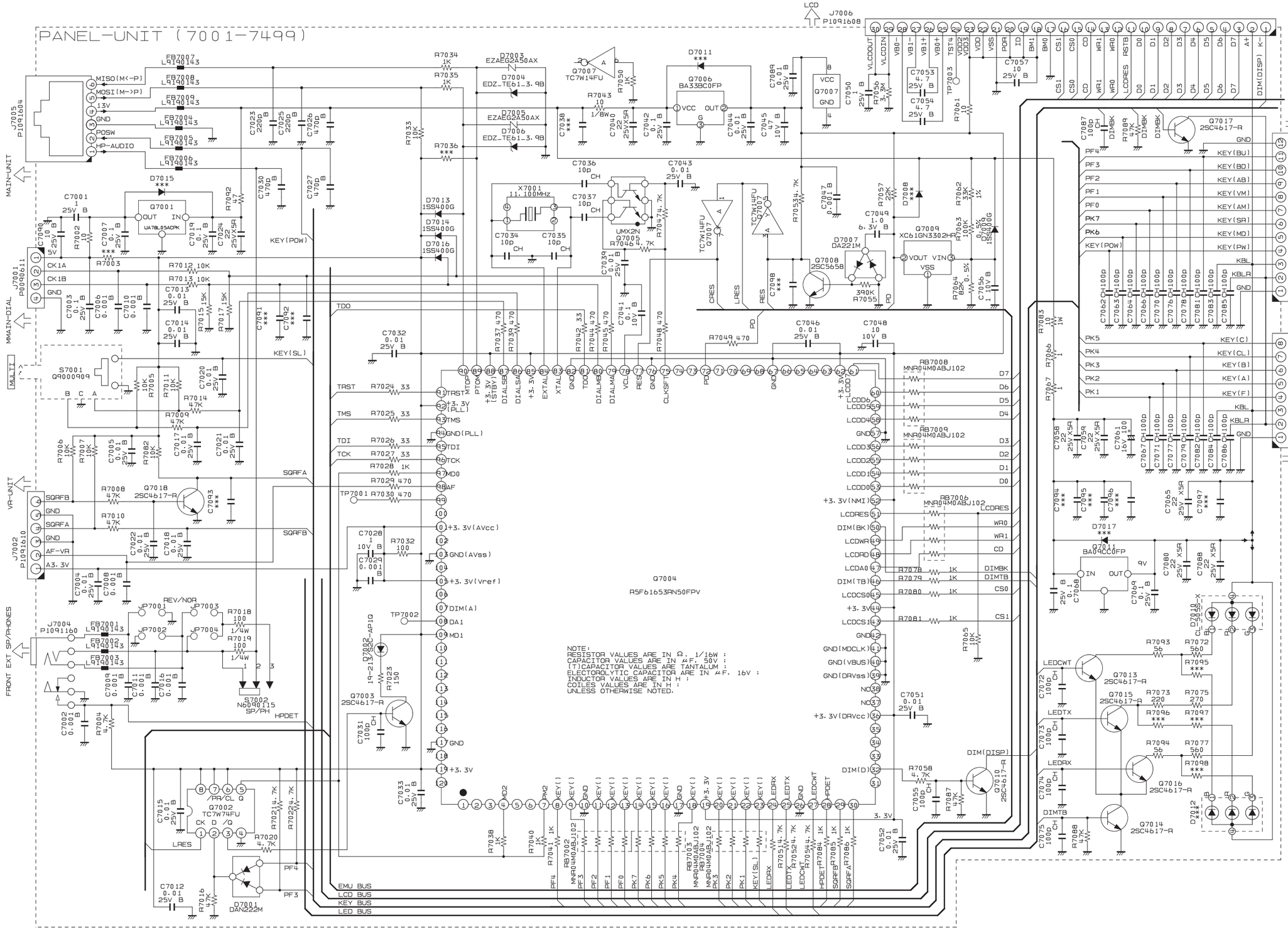
PANEL-UNIT (7001-7499)
LCD
J7006
P1091608
J7005
P1091604
MAIN-UNIT
J7001
P0090611
MAIN-DIAL
MULTI
J7002
P1091610
VR-UNIT
J7004
P1091160
FRONT EXT SP/PHONES
J7007
P1091148 SW-B-UNIT(TOP)
J7008
P1091201
SW-A-UNIT(FRONT)
Q7004
R5F61653RN50FPV
X7001
11.100MHz
Q7002
TC7W74FU
Q7006
BA33BC0FP
Q7009
XC61GN3302HR
Q7008
2SC5658
Q7017
2SC4617-R
Q7018
2SC4617-R
Q7003
2SC4617-R
Q7013
2SC4617-R
Q7015
2SC4617-R
Q7016
2SC4617-R
Q7014
2SC4617-R
Q7010
2SC4617-R
Q7011
BA04CC0FP
S7001
Q9000909
S7002
N6090115
SP/PH
D7001
DAN222M
D7007
DA221M
D7011
***
D7015
***
D7017
***
D7012
***
D7010
CL-0155-X
D7002
19-213/GHC-AP1Q
RB7008
MNR04M0ABJ102
RB7009
MNR04M0ABJ102
RB7006
MNR04M0ABJ102
RB7002
MNR04M0ABJ102
RB7003
MNR04M0ABJ102
NOTE:
RESISTOR VALUES ARE IN Ω. 1/16W :
CAPACITOR VALUES ARE IN μF. 50V :
(T)CAPACITOR VALUES ARE TANTALUM :
ELECTOROLYTIC CAPACITOR ARE IN μF. 16V :
INDUCTOR VALUES ARE IN H :
COILES VALUES ARE IN H :
UNLESS OTHERWISE NOTED.
EMU BUS
LCD BUS
KEY BUS
LED BUS

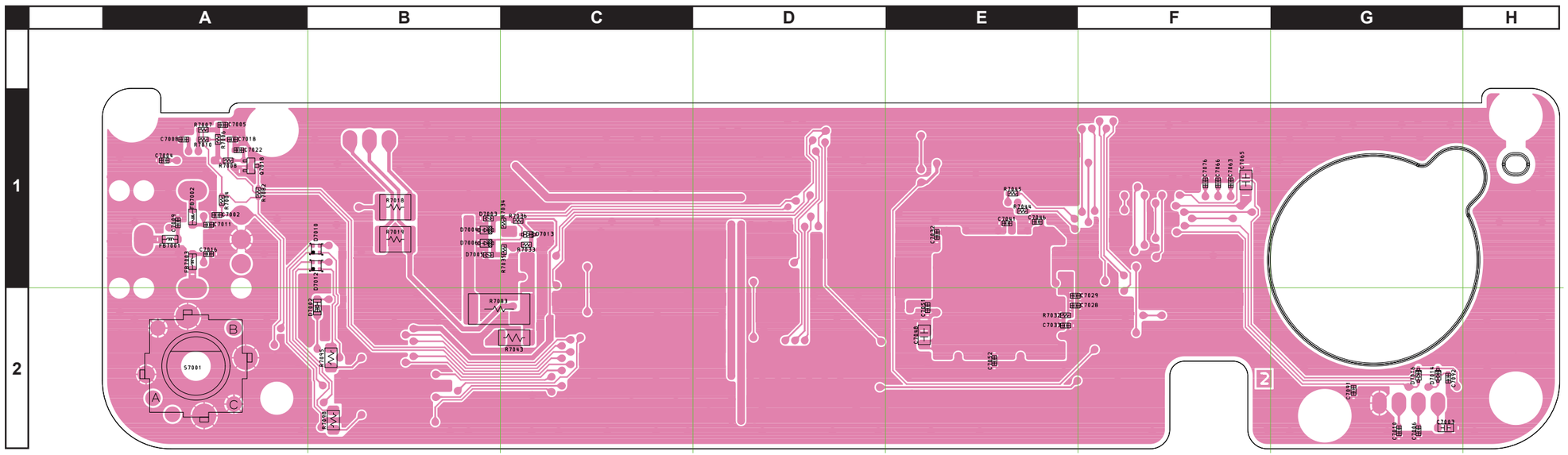

side A

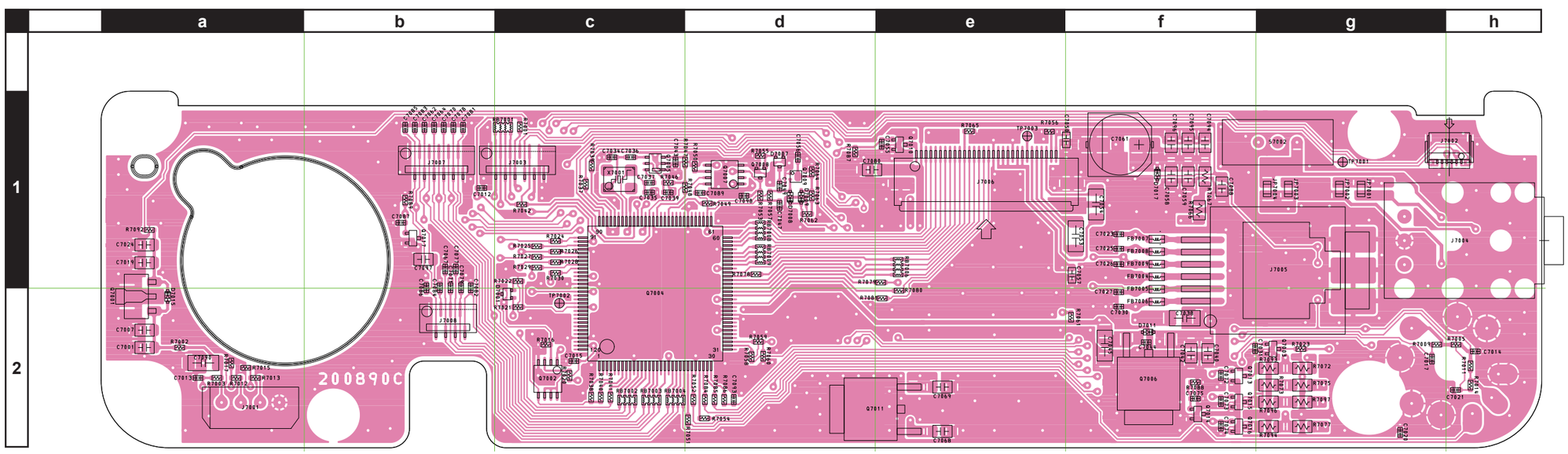

side B

REF	DESCRIPTION	VALUE	V/W	TOL.	MFR'S DESIG	YAESU P/N	VERS.	LOT	SIDE	LAY ADR
C 7001	CHIP CAP.	1uF	25V	B	GRM21BB31E105KA98L	K22140826		1-	B	a2
C 7002	CHIP CAP.	0.001uF	50V	B	GRM155B11H102KA01D	K22178809		1-	A	A1
C 7003	CHIP CAP.	0.1uF	25V	B	GRM188B11E104KA01D	K22144814		1-	A	G2
C 7004	CHIP CAP.	0.01uF	25V	B	GRM155B11E103KA01D	K22148834		1-	A	A1
C 7005	CHIP CAP.	0.01uF	25V	B	GRM155B11E103KA01D	K22148834		1-	A	A1
C 7006	CHIP CAP.	0.001uF	50V	B	GRM155B11H102KA01D	K22178809		1-	A	G2
C 7007	CHIP CAP.	0.1uF	25V	B	GRM21BB11E104KA01L	K22140811		1-	B	a2
C 7008	CHIP CAP.	0.001uF	50V	B	GRM155B11H102KA01D	K22178809		1-	A	A1
C 7009	CHIP CAP.	0.001uF	50V	B	GRM155B11H102KA01D	K22178809		1-	A	A1
C 7010	CHIP CAP.	0.001uF	50V	B	GRM155B11H102KA01D	K22178809		1-	A	G2
C 7011	CHIP CAP.	0.001uF	50V	B	GRM155B11H102KA01D	K22178809		1-	A	A1
C 7012	CHIP CAP.	0.01uF	25V	B	GRM155B11E103KA01D	K22148834		1-	B	b1
C 7013	CHIP CAP.	0.01uF	25V	B	GRM155B11E103KA01D	K22148834		1-	B	a2
C 7014	CHIP CAP.	0.01uF	25V	B	GRM155B11E103KA01D	K22148834		1-	B	h2
C 7015	CHIP CAP.	0.01uF	25V	B	GRM155B11E103KA01D	K22148834		1-	B	c2
C 7016	CHIP CAP.	0.001uF	50V	B	GRM155B11H102KA01D	K22178809		1-	A	A1
C 7017	CHIP CAP.	0.01uF	25V	B	GRM155B11E103KA01D	K22148834		1-	B	g2
C 7018	CHIP CAP.	0.01uF	25V	B	GRM155B11E103KA01D	K22148834		1-	A	A1
C 7019	CHIP CAP.	0.1uF	25V	B	GRM21BB11E104KA01L	K22140811		1-	B	a1
C 7020	CHIP CAP.	0.01uF	25V	B	GRM155B11E103KA01D	K22148834		1-	B	g2
C 7021	CHIP CAP.	0.01uF	25V	B	GRM155B11E103KA01D	K22148834		1-	B	h2
C 7022	CHIP CAP.	0.01uF	25V	B	GRM155B11E103KA01D	K22148834		1-	A	A1
C 7023	CHIP CAP.	220pF	50V	B	GRM155B11H221KA01D	K22178801		1-	B	f1
C 7024	CHIP CAP.	22uF	25V	X5R	GRM21BR61E226ME44L	K22140830		1-	B	a1
C 7025	CHIP CAP.	220pF	50V	B	GRM155B11H221KA01D	K22178801		1-	B	f1
C 7026	CHIP CAP.	470pF	50V	B	GRM155B11H471KA01D	K22178805		1-	B	f1
C 7027	CHIP CAP.	470pF	50V	B	GRM155B11H471KA01D	K22178805		1-	B	f2
C 7028	CHIP CAP.	1uF	10V	B	GRM155B31A105KE15D	K22108809		1-	A	E2
C 7029	CHIP CAP.	0.001uF	50V	B	GRM155B11H102KA01D	K22178809		1-	A	E2
C 7030	CHIP CAP.	470pF	50V	B	GRM155B11H471KA01D	K22178805		1-	B	f2
C 7031	CHIP CAP.	100pF	50V	CH	GRM1552C1H101JA01D	K22178236		1-	B	f2
C 7032	CHIP CAP.	0.01uF	25V	B	GRM155B11E103KA01D	K22148834		1-	A	E1
C 7033	CHIP CAP.	0.01uF	25V	B	GRM155B11E103KA01D	K22148834		1-	A	E2
C 7034	CHIP CAP.	10pF	50V	CH	GRM1552C1H100JA01D	K22178212		1-	B	c1
C 7035	CHIP CAP.	10pF	50V	CH	GRM1552C1H100JA01D	K22178212		1-	B	c1
C 7036	CHIP CAP.	10pF	50V	CH	GRM1552C1H100JA01D	K22178212		1-	B	c1
C 7037	CHIP CAP.	10pF	50V	CH	GRM1552C1H100JA01D	K22178212		1-	B	c1
C 7039	CHIP CAP.	0.01uF	25V	B	GRM155B11E103KA01D	K22148834		1-	B	c1
C 7040	CHIP CAP.	22uF	25V	X5R	GRM21BR61E226ME44L	K22140830		1-	B	f2
C 7041	CHIP CAP.	0.1uF	10V	B	GRM155B11A104KA01D	K22108802		1-	A	E1
C 7042	CHIP CAP.	0.1uF	25V	B	GRM21BB11E104KA01L	K22140811		1-	B	f2
C 7043	CHIP CAP.	0.01uF	25V	B	GRM155B11E103KA01D	K22148834		1-	B	c1
C 7044	CHIP CAP.	0.01uF	25V	B	GRM155B11E103KA01D	K22148834		1-	B	f2
C 7045	CHIP CAP.	47uF	10V	B	GRM31CB31A476ME15L	K22101804		1-	B	f2
C 7046	CHIP CAP.	0.01uF	25V	B	GRM155B11E103KA01D	K22148834		1-	A	E1
C 7047	CHIP CAP.	0.001uF	50V	B	GRM155B11H102KA01D	K22178809		1-	B	d1
C 7048	CHIP CAP.	10uF	10V	B	GRM21BB31A106KE18L	K22100808		1-	A	E2
C 7049	CHIP CAP.	1uF	6.3V	B	GRM155B30J105KE18D	K22088803		1-	B	d1
C 7050	CHIP CAP.	1uF	25V	B	GRM188B31E105KA75D	K22144815		1-	B	f1
C 7051	CHIP CAP.	0.01uF	25V	B	GRM155B11E103KA01D	K22148834		1-	A	E2
C 7052	CHIP CAP.	0.01uF	25V	B	GRM155B11E103KA01D	K22148834		1-	A	E2
C 7053	CHIP CAP.	4.7uF	25V	B	GRM31CB31E475KA87L	K22141813		1-	B	f1
C 7054	CHIP CAP.	4.7uF	25V	B	GRM31CB31E475KA87L	K22141813		1-	B	f1
C 7055	CHIP CAP.	100pF	50V	CH	GRM1552C1H101JA01D	K22178236		1-	B	e1
C 7056	CHIP CAP.	1uF	10V	B	GRM155B31A105KE15D	K22108809		1-	B	d1
C 7057	CHIP CAP.	10uF	25V	B	GRM188R61E106MA73D	K22144818		1-	B	f1
C 7058	CHIP CAP.	22uF	25V	X5R	GRM21BR61E226ME44L	K22140830		1-	B	f1
C 7059	CHIP CAP.	22uF	25V	X5R	GRM21BR61E226ME44L	K22140830		1-	B	f1
C 7061	AL.ELECTRO.CAP.	220uF	16V		EMVA160ADA221MF80G	K48120021		1-	B	f1
C 7061	AL.ELECTRO.CAP.	330uF	16V		EMZR160ADA331MF80G	K48120044		4-	B	f1
C 7062	CHIP CAP.	100pF	50V	CH	GRM1552C1H101JA01D	K22178236		1-	B	b1
C 7063	CHIP CAP.	100pF	50V	CH	GRM1552C1H101JA01D	K22178236		1-	A	F1
C 7064	CHIP CAP.	100pF	50V	CH	GRM1552C1H101JA01D	K22178236		1-	B	b1
C 7065	CHIP CAP.	22uF	25V	X5R	GRM21BR61E226ME44L	K22140830		1-	A	F1
C 7066	CHIP CAP.	100pF	50V	CH	GRM1552C1H101JA01D	K22178236		1-	A	F1
C 7067	CHIP CAP.	100pF	50V	CH	GRM1552C1H101JA01D	K22178236		1-	B	b1
C 7068	CHIP CAP.	0.1uF	25V	B	GRM21BB11E104KA01L	K22140811		1-	B	e2
C 7069	CHIP CAP.	0.1uF	25V	B	GRM21BB11E104KA01L	K22140811		1-	B	e2
C 7070	CHIP CAP.	100pF	50V	CH	GRM1552C1H101JA01D	K22178236		1-	B	b1
C 7071	CHIP CAP.	100pF	50V	CH	GRM1552C1H101JA01D	K22178236		1-	B	b2
C 7072	CHIP CAP.	100pF	50V	CH	GRM1552C1H101JA01D	K22178236		1-	B	f2
C 7073	CHIP CAP.	100pF	50V	CH	GRM1552C1H101JA01D	K22178236		1-	B	f2
C 7074	CHIP CAP.	100pF	50V	CH	GRM1552C1H101JA01D	K22178236		1-	B	f2
C 7075	CHIP CAP.	100pF	50V	CH	GRM1552C1H101JA01D	K22178236		1-	B	f2
C 7076	CHIP CAP.	100pF	50V	CH	GRM1552C1H101JA01D	K22178236		1-	A	F1

REF	DESCRIPTION	VALUE	V/W	TOL.	MFR'S DESIG	YAESU P/N	VERS.	LOT	SIDE	LAY ADR
C 7077	CHIP CAP.	100pF	50V	CH	GRM1552C1H101JA01D	K22178236		1-	B	b1
C 7078	CHIP CAP.	100pF	50V	CH	GRM1552C1H101JA01D	K22178236		1-	B	b1
C 7079	CHIP CAP.	100pF	50V	CH	GRM1552C1H101JA01D	K22178236		1-	B	b2
C 7080	CHIP CAP.	22uF	25V	X5R	GRM21BR61E226ME44L	K22140830		1-	B	e1
C 7081	CHIP CAP.	100pF	50V	CH	GRM1552C1H101JA01D	K22178236		1-	B	b1
C 7082	CHIP CAP.	100pF	50V	CH	GRM1552C1H101JA01D	K22178236		1-	B	b2
C 7083	CHIP CAP.	100pF	50V	CH	GRM1552C1H101JA01D	K22178236		1-	B	b1
C 7084	CHIP CAP.	100pF	50V	CH	GRM1552C1H101JA01D	K22178236		1-	B	b2
C 7085	CHIP CAP.	100pF	50V	CH	GRM1552C1H101JA01D	K22178236		1-	B	b1
C 7086	CHIP CAP.	100pF	50V	CH	GRM1552C1H101JA01D	K22178236		1-	B	b2
C 7087	CHIP CAP.	100pF	50V	CH	GRM1552C1H101JA01D	K22178236		1-	B	b1
C 7088	CHIP CAP.	22uF	25V	X5R	GRM21BR61E226ME44L	K22140830		1-	B	f1
C 7089	CHIP CAP.	0.01uF	25V	B	GRM155B11E103KA01D	K22148834		1-	B	d1
C 7090	CHIP CAP.	10uF	25V	B	GRM31CB31E106KA75L	K22141815		1-	B	a2
C 7099	AL.ELECTRO.CAP.	470uF	16V		RE3-16V471MG3#	K40129066		1-		
D 7001	DIODE				DAN222M T2L	G2070936		1-	B	c2
D 7002	LED				19-213/S2C-AP1Q2B/3T	G2071558		1-	A	B2
D 7003	SURGE ABSORBER				EZAEG2A50AX	Q9000868		1-	A	B1
D 7004	DIODE				EDZV T2R 3.9B	G2071004		1-	A	B1
D 7005	SURGE ABSORBER				EZAEG2A50AX	Q9000868		1-	A	B1
D 7006	DIODE				EDZV T2R 3.9B	G2071004		1-	A	B1
D 7007	DIODE				DA221M T2L	G2070940		1-	B	d1
D 7009	DIODE				1SS400G T2R	G2070934		1-	B	d1
D 7010	LED				CL-505S-X-SD-T	G2071562		1-	A	B1
D 7013	DIODE				1SS400G T2R	G2070934		1-	A	C1
D 7014	DIODE				1SS400G T2R	G2070934		1-	A	G2
D 7016	DIODE				1SS400G T2R	G2070934		1-	A	G2
FB7001	FERRITE BEADS				BLM18BD601SN1D	L9190143		1-	A	A1
FB7002	FERRITE BEADS				BLM18BD601SN1D	L9190143		1-	A	A1
FB7003	FERRITE BEADS				BLM18BD601SN1D	L9190143		1-	A	A1
FB7004	FERRITE BEADS				BLM18PG221SN1D	L9190181		1-	B	f1
FB7005	FERRITE BEADS				BLM18BD601SN1D	L9190143		1-	B	f2
FB7006	FERRITE BEADS				BLM18BD601SN1D	L9190143		1-	B	f2
FB7007	FERRITE BEADS				BLM18BD601SN1D	L9190143		1-	B	f1
FB7008	FERRITE BEADS				BLM18BD601SN1D	L9190143		1-	B	f1
FB7009	FERRITE BEADS				BLM18PG221SN1D	L9190181		1-	B	f1
J 7001	CONNECTOR				SB20-04WS	P0090611		1-	B	a2
J 7002	CONNECTOR				AYF530635	P1091610		1-	B	g1
J 7003	CONNECTOR				12FLT-SM2-TB(LF)(SN)	P1091198		1-	B	c1
J 7004	CONNECTOR				HSJ7063-01-440	P1091160		1-	B	h1
J 7005	CONNECTOR				C20GH6-0602T-R	P1091604A		1-	B	g1
J 7006	CONNECTOR				IMSA-9637S-30-Y800	P1091608		1-	B	e1
J 7007	CONNECTOR				12FLT-SM2-TB(LF)(SN)	P1091198		1-	B	b1
J 7008	CONNECTOR				08FLT-SM2-TB(LF)(SN)	P1091201		1-	B	b2
JP7001	CHIP RES.	0	1/16W	5%	RMC1/16S JPTH	J24189070		1-	B	g1
JP7003	CHIP RES.	0	1/16W	5%	RMC1/16S JPTH	J24189070		1-	B	g1
JP7004	WIRE ASSY				GRN 20 2/2	T50502000		1-	B	g1
Q 7001	IC				UA78L05ACPKE6(TAPE)	G1094229		1-	B	a2
Q 7002	IC				TC7W74FU(TE12L,F)	G1091788		1-	B	c2
Q 7003	TRANSISTOR				2SC4617 TL R	G3346178R		1-	B	g2
Q 7004	IC				R5F61653RN50FPV	G1095228		1-	B	c2
Q 7005	TRANSISTOR				UMX2N TR	G3070254		1-	B	c1
Q 7006	IC				BA33BC0FP-E2	G1094733		1-	B	f2
Q 7007	IC				TC7W14FU(TE12L.F)	G1093321		1-	B	d1
Q 7008	TRANSISTOR				2SC5658 T2L Q/R	G3356588		1-	B	d1
Q 7009	IC				XC61GN3302HR-G	G1095116		1-	B	d1
Q 7010	TRANSISTOR				2SC4617 TL R	G3346178R		1-	B	e1
Q 7011	IC				BA09CC0FP-BZE2	G1094432		1-	B	e2
Q 7013	TRANSISTOR				2SC4617 TL R	G3346178R		1-	B	f2
Q 7014	TRANSISTOR				2SC4617 TL R	G3346178R		1-	B	f2
Q 7015	TRANSISTOR				2SC4617 TL R	G3346178R		1-	B	f2
Q 7016	TRANSISTOR				2SC4617 TL R	G3346178R		1-	B	f2
Q 7017	TRANSISTOR				2SC4617 TL R	G3346178R		1-	B	b1
Q 7018	TRANSISTOR				2SC4617 TL R	G3346178R		1-	A	A1
R 7001	CHIP RES.	3.3k	1/16W	5%	RMC1/16S 332JTH	J24189031		1-	B	c1
R 7002	CHIP RES.	10	1/16W	5%	RMC1/16S 100JTH	J24189001		1-	B	a2
R 7004	CHIP RES.	4.7k	1/16W	5%	RMC1/16S 472JTH	J24189033		1-	A	A1
R 7005	CHIP RES.	10k	1/16W	5%	RMC1/16S 103JTH	J24189037		1-	B	h2
R 7006	CHIP RES.	10k	1/16W	5%	RMC1/16S 103JTH	J24189037		1-	A	A1
R 7007	CHIP RES.	10k	1/16W	5%	RMC1/16S 103JTH	J24189037		1-	A	A1
R 7008	CHIP RES.	47k	1/16W	5%	RMC1/16S 473JTH	J24189045		1-	A	A1
R 7009	CHIP RES.	47k	1/16W	5%	RMC1/16S 473JTH	J24189045		1-	B	g2
R 7010	CHIP RES.	47k	1/16W	5%	RMC1/16S 473JTH	J24189045		1-	A	A1
R 7011	CHIP RES.	10k	1/16W	5%	RMC1/16S 103JTH	J24189037		1-	B	h2
R 7012	CHIP RES.	10k	1/16W	5%	RMC1/16S 103JTH	J24189037		1-	B	a2

REF	DESCRIPTION	VALUE	V/W	TOL.	MFR'S DESIG	YAESU P/N	VERS.	LOT	SIDE	LAY ADR
R 7013	CHIP RES.	10k	1/16W	5%	RMC1/16S 103JTH	J24189037		1-	B	a2
R 7014	CHIP RES.	47k	1/16W	5%	RMC1/16S 473JTH	J24189045		1-	B	h2
R 7015	CHIP RES.	15k	1/16W	5%	RMC1/16S 153JTH	J24189039		1-	B	a2
R 7016	CHIP RES.	47k	1/16W	5%	RMC1/16S 473JTH	J24189045		1-	B	c2
R 7017	CHIP RES.	15k	1/16W	5%	RMC1/16S 153JTH	J24189039		1-	B	a2
R 7018	CHIP RES.	100	1/4W	5%	RMC1/4 101JATP	J24245101		1-	A	B1
R 7019	CHIP RES.	100	1/4W	5%	RMC1/4 101JATP	J24245101		1-	A	B1
R 7020	CHIP RES.	4.7k	1/16W	5%	RMC1/16S 472JTH	J24189033		1-	B	c2
R 7021	CHIP RES.	4.7k	1/16W	5%	RMC1/16S 472JTH	J24189033		1-	B	c2
R 7022	CHIP RES.	4.7k	1/16W	5%	RMC1/16S 472JTH	J24189033		1-	B	c1
R 7023	CHIP RES.	150	1/16W	5%	RMC1/16S 151JTH	J24189015		1-	B	g2
R 7024	CHIP RES.	33	1/16W	5%	RMC1/16S 330JTH	J24189007		1-	B	c1
R 7025	CHIP RES.	33	1/16W	5%	RMC1/16S 330JTH	J24189007		1-	B	c1
R 7026	CHIP RES.	33	1/16W	5%	RMC1/16S 330JTH	J24189007		1-	B	c1
R 7027	CHIP RES.	33	1/16W	5%	RMC1/16S 330JTH	J24189007		1-	B	c1
R 7028	CHIP RES.	1k	1/16W	5%	RMC1/16S 102JTH	J24189025		1-	B	c1
R 7029	CHIP RES.	470	1/16W	5%	RMC1/16S 471JTH	J24189021		1-	B	c1
R 7030	CHIP RES.	470	1/16W	5%	RMC1/16S 471JTH	J24189021		1-	B	c1
R 7032	CHIP RES.	100	1/16W	5%	RMC1/16S 101JTH	J24189013		1-	A	E2
R 7033	CHIP RES.	10k	1/16W	5%	RMC1/16S 103JTH	J24189037		1-	A	C1
R 7034	CHIP RES.	1k	1/16W	5%	RMC1/16S 102JTH	J24189025		1-	A	C1
R 7035	CHIP RES.	1k	1/16W	5%	RMC1/16S 102JTH	J24189025		1-	A	C1
R 7037	CHIP RES.	470	1/16W	5%	RMC1/16S 471JTH	J24189021		1-	B	c1
R 7038	CHIP RES.	1k	1/16W	5%	RMC1/16S 102JTH	J24189025		1-	B	c2
R 7039	CHIP RES.	470	1/16W	5%	RMC1/16S 471JTH	J24189021		1-	B	c1
R 7040	CHIP RES.	1k	1/16W	5%	RMC1/16S 102JTH	J24189025		1-	B	c2
R 7041	CHIP RES.	1k	1/16W	5%	RMC1/16S 102JTH	J24189025		1-	B	c2
R 7042	CHIP RES.	33	1/16W	5%	RMC1/16S 330JTH	J24189007		1-	B	c1
R 7043	CHIP RES.	10	1/8W	5%	RMC1/8T 100J	J24215100		1-	A	C2
R 7044	CHIP RES.	470	1/16W	5%	RMC1/16S 471JTH	J24189021		1-	A	E1
R 7045	CHIP RES.	470	1/16W	5%	RMC1/16S 471JTH	J24189021		1-	A	E1
R 7046	CHIP RES.	4.7k	1/16W	5%	RMC1/16S 472JTH	J24189033		1-	B	c1
R 7047	CHIP RES.	4.7k	1/16W	5%	RMC1/16S 472JTH	J24189033		1-	B	d1
R 7048	CHIP RES.	470	1/16W	5%	RMC1/16S 471JTH	J24189021		1-	B	d1
R 7049	CHIP RES.	470	1/16W	5%	RMC1/16S 471JTH	J24189021		1-	B	d1
R 7050	CHIP RES.	1k	1/16W	5%	RMC1/16S 102JTH	J24189025		1-	B	d1
R 7051	CHIP RES.	4.7k	1/16W	5%	RMC1/16S 472JTH	J24189033		1-	B	d2
R 7052	CHIP RES.	4.7k	1/16W	5%	RMC1/16S 472JTH	J24189033		1-	B	d2
R 7053	CHIP RES.	4.7k	1/16W	5%	RMC1/16S 472JTH	J24189033		1-	B	d1
R 7054	CHIP RES.	4.7k	1/16W	5%	RMC1/16S 472JTH	J24189033		1-	B	d2
R 7055	CHIP RES.	390k	1/16W	5%	RMC1/16S 394JTH	J24189056		1-	B	d1
R 7056	CHIP RES.	3.3M	1/16W	5%	RMC1/16S 335JTH	J24189324		1-	B	e1
R 7057	CHIP RES.	22k	1/16W	5%	RMC1/16S 223JTH	J24189041		1-	B	d1
R 7058	CHIP RES.	4.7k	1/16W	5%	RMC1/16S 472JTH	J24189033		1-	B	d2
R 7059	CHIP RES.	33	1/16W	5%	RMC1/16S 330JTH	J24189007		1-	B	d2
R 7060	CHIP RES.	47k	1/16W	5%	RMC1/16S 473JTH	J24189045		1-	B	d2
R 7061	CHIP RES.	10	1/16W	5%	RMC1/16S 100JTH	J24189001		1-	B	f2
R 7062	CHIP RES.	33k	1/16W	1%	RMC1/16SK333FTH	J24189494		1-	B	d1
R 7063	CHIP RES.	100k	1/16W	0.5%	MCR01MZPD1003	J24189386		1-	B	d1
R 7064	CHIP RES.	82k	1/16W	0.5%	MCR01MZPD8202	J24189385		1-	B	d1
R 7065	CHIP RES.	10k	1/16W	5%	RMC1/16S 103JTH	J24189037		1-	B	e1
R 7066	CHIP RES.	1	1/10W	5%	RMC1/10T 1R0J	J24205010		1-	B	f1
R 7067	CHIP RES.	1	1/10W	5%	RMC1/10T 1R0J	J24205010		1-	B	f1
R 7072	CHIP RES.	560	1/10W	5%	RMC1/10T 561J	J24205561		1-	B	g2
R 7073	CHIP RES.	220	1/10W	5%	RMC1/10T 221J	J24205221		1-	B	g2
R 7075	CHIP RES.	270	1/10W	5%	RMC1/10T 271J	J24205271		1-	B	g2
R 7077	CHIP RES.	560	1/10W	5%	RMC1/10T 561J	J24205561		1-	B	g2
R 7078	CHIP RES.	1k	1/16W	5%	RMC1/16S 102JTH	J24189025		1-	B	d1
R 7079	CHIP RES.	1k	1/16W	5%	RMC1/16S 102JTH	J24189025		1-	B	e1
R 7080	CHIP RES.	1k	1/16W	5%	RMC1/16S 102JTH	J24189025		1-	B	e2
R 7081	CHIP RES.	1k	1/16W	5%	RMC1/16S 102JTH	J24189025		1-	B	e2
R 7082	CHIP RES.	10k	1/16W	5%	RMC1/16S 103JTH	J24189037		1-	A	A1
R 7083	CHIP RES.	10	1W	5%	RMC1 100JTE	J24305100		1-	A	C2
R 7084	CHIP RES.	1k	1/16W	5%	RMC1/16S 102JTH	J24189025		1-	B	d2
R 7085	CHIP RES.	1k	1/16W	5%	RMC1/16S 102JTH	J24189025		1-	B	d2
R 7086	CHIP RES.	1k	1/16W	5%	RMC1/16S 102JTH	J24189025		1-	B	d2
R 7087	CHIP RES.	47k	1/16W	5%	RMC1/16S 473JTH	J24189045		1-	B	d1
R 7088	CHIP RES.	47k	1/16W	5%	RMC1/16S 473JTH	J24189045		1-	B	f2
R 7089	CHIP RES.	47k	1/16W	5%	RMC1/16S 473JTH	J24189045		1-	B	b1
R 7092	CHIP RES.	47	1/16W	5%	RMC1/16S 470JTH	J24189009		1-	B	a1
R 7093	CHIP RES.	56	1/10W	5%	RMC1/10T 560J	J24205560		1-	B	g2
R 7094	CHIP RES.	56	1/10W	5%	RMC1/10T 560J	J24205560		1-	B	g2
RB7001	BLOCK RES.				RAC104D332JCTH	J42900041		1-	B	c1
RB7002	BLOCK RES.				MNR04M0ABJ102	J42900039		1-	B	c2
RB7003	BLOCK RES.				MNR04M0ABJ102	J42900039		1-	B	c2

REF	DESCRIPTION	VALUE	V/W	TOL.	MFR'S DESIG	YAESU P/N	VERS.	LOT	SIDE	LAY ADR
RB7004	BLOCK RES.				MNR04M0ABJ102	J42900039		1-	B	c2
RB7006	BLOCK RES.				MNR04M0ABJ102	J42900039		1-	B	e1
RB7008	BLOCK RES.				MNR04M0ABJ102	J42900039		1-	B	d1
RB7009	BLOCK RES.				MNR04M0ABJ102	J42900039		1-	B	d1
S 7001	ROTARY ENCODER				EC09E1524405	Q9000909		1-	A	A2
S 7002	SLIDE SWITCH				SSSS912500	N6090115		1-	B	g1
X 7001	XTAL DSX321G	11.1MHz			DSX321G 11.100MHZ	H0103446		1-	B	c1

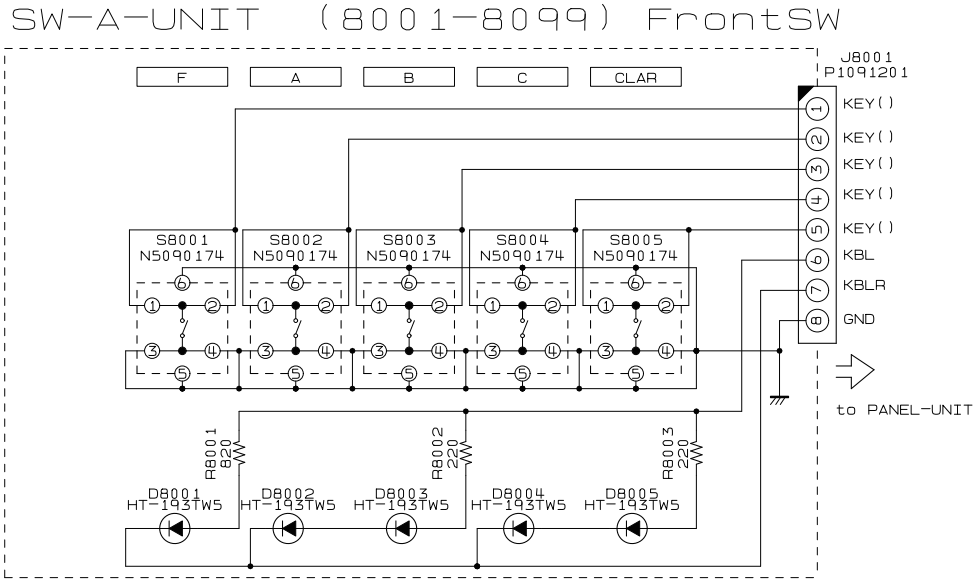

NOTE:
RESISTOR VALUES ARE IN Ω. 1/16W :
CAPACITOR VALUES ARE IN μF. 50V :
(T)CAPACITOR VALUES ARE TANTALUM :
ELECTOROLYTIC CAPACITOR ARE IN μF. 16V :
INDUCTOR VALUES ARE IN H :
COILES VALUES ARE IN H :
UNLESS OTHERWISE NOTED.

Parts Layout

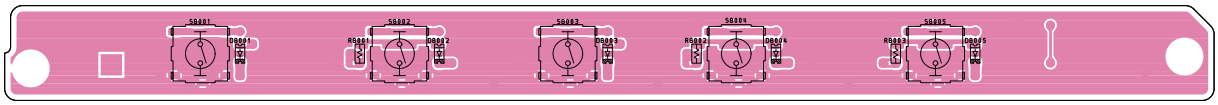

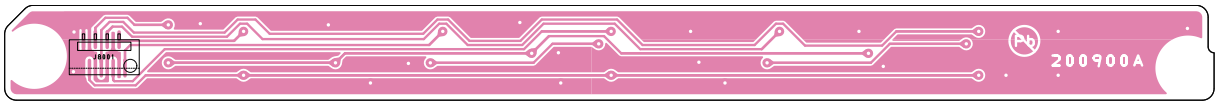

Parts List

REF	DESCRIPTION	VALUE	V/W	TOL.	MFR'S DESIG	YAESU P/N	VERS.	LOT	SIDE	LAY ADR
	PCB with Components					CD0225001				
D 8001	LED				HT-193TW5	G2071390		1-	A	
D 8002	LED				HT-193TW5	G2071390		1-	A	
D 8003	LED				HT-193TW5	G2071390		1-	A	
D 8004	LED				HT-193TW5	G2071390		1-	A	
D 8005	LED				HT-193TW5	G2071390		1-	A	
D 8010	LED				HT-193TW5	G2071390		1-		
J 8001	CONNECTOR				08FLT-SM2-TB(LF)(SN)	P1091201		1-	B	
R 8001	CHIP RES.	270	1/16W	5%	RMC1/16 271JATP	J24185271		1-	A	
R 8002	CHIP RES.	270	1/16W	5%	RMC1/16 271JATP	J24185271		1-	A	
R 8003	CHIP RES.	270	1/16W	5%	RMC1/16 271JATP	J24185271		1-	A	
S 8001	TACTILE SWITCH				EVQPLHA15	N5090174		1-	A	
S 8002	TACTILE SWITCH				EVQPLHA15	N5090174		1-	A	
S 8003	TACTILE SWITCH				EVQPLHA15	N5090174		1-	A	
S 8004	TACTILE SWITCH				EVQPLHA15	N5090174		1-	A	
S 8005	TACTILE SWITCH				EVQPLHA15	N5090174		1-	A	

Circuit Diagram

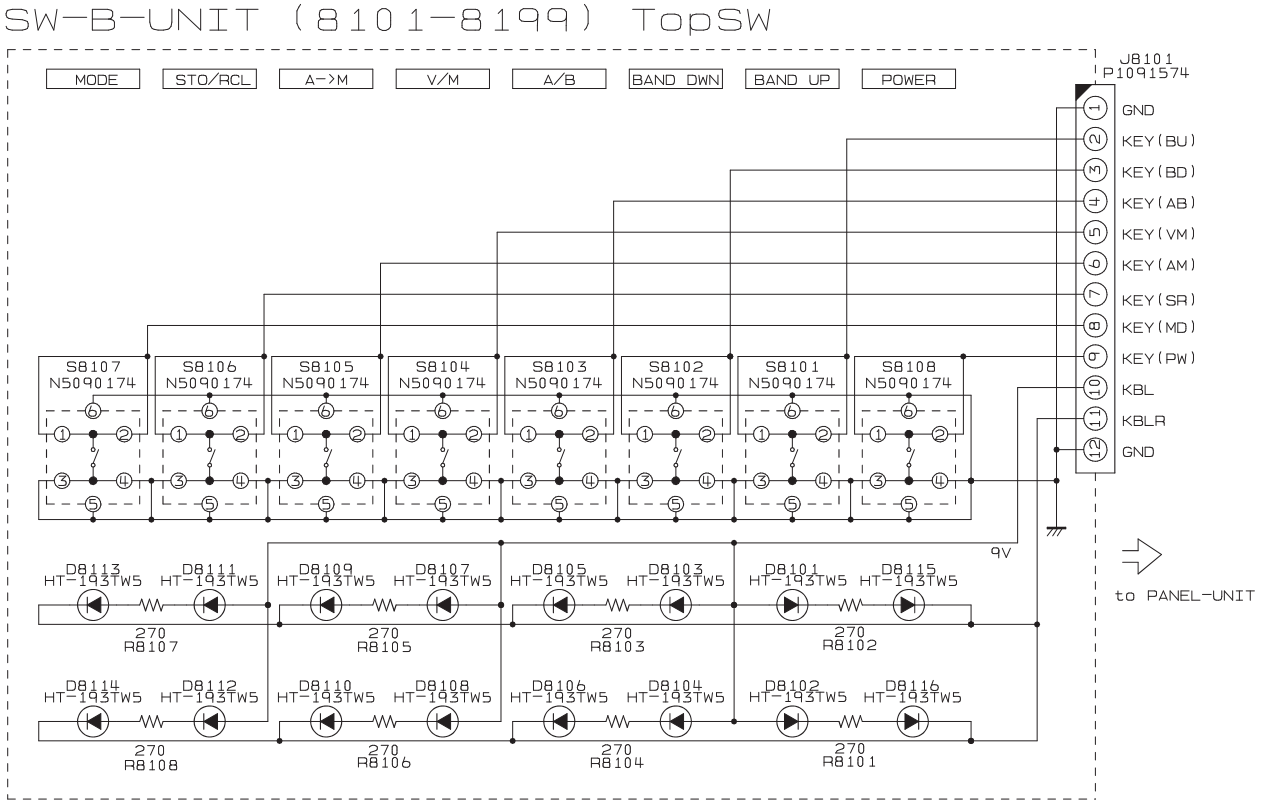

NOTE:
RESISTOR VALUES ARE IN Ω. 1/16W :
CAPACITOR VALUES ARE IN μF. 50V :
(T)CAPACITOR VALUES ARE TANTALUM :
ELECTOROLYTIC CAPACITOR ARE IN μF. 16V :
INDUCTOR VALUES ARE IN H :
COILES VALUES ARE IN H :
UNLESS OTHERWISE NOTED.

Parts Layout

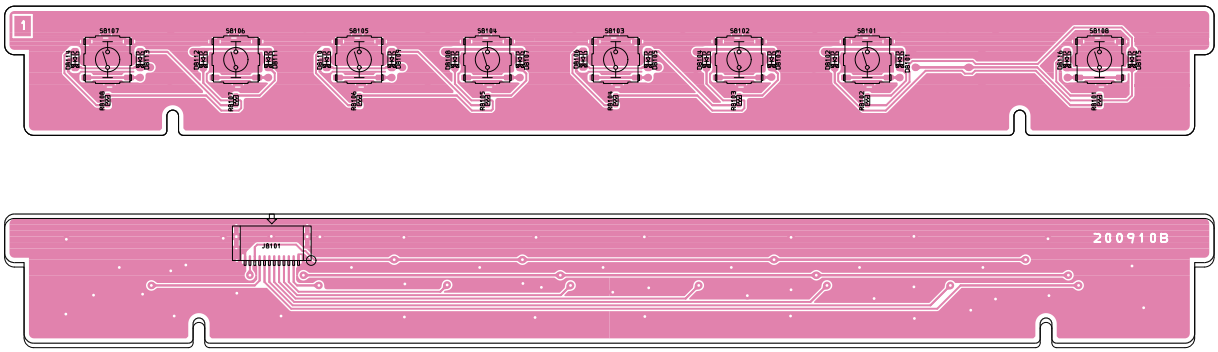

REF	DESCRIPTION	VALUE	V/W	TOL.	MFR'S DESIG	YAESU P/N	VERS.	LOT	SIDE	LAY ADR
	PCB with Components					CD0226001				
D 8101	LED				HT-193TW5	G2071390		1-	A	
D 8102	LED				HT-193TW5	G2071390		1-	A	
D 8103	LED				HT-193TW5	G2071390		1-	A	
D 8104	LED				HT-193TW5	G2071390		1-	A	
D 8105	LED				HT-193TW5	G2071390		1-	A	
D 8106	LED				HT-193TW5	G2071390		1-	A	
D 8107	LED				HT-193TW5	G2071390		1-	A	
D 8108	LED				HT-193TW5	G2071390		1-	A	
D 8109	LED				HT-193TW5	G2071390		1-	A	
D 8110	LED				HT-193TW5	G2071390		1-	A	
D 8111	LED				HT-193TW5	G2071390		1-	A	
D 8112	LED				HT-193TW5	G2071390		1-	A	
D 8113	LED				HT-193TW5	G2071390		1-	A	
D 8114	LED				HT-193TW5	G2071390		1-	A	
D 8115	LED				HT-193TW5	G2071390		1-	A	
D 8116	LED				HT-193TW5	G2071390		1-	A	
J 8101	CONNECTOR				12FHJ-SM1-TB(LF)(SN)	P1091574		1-	B	
R 8101	CHIP RES.	270	1/16W	5%	RMC1/16S 271JTH	J24189018		1-	A	
R 8102	CHIP RES.	270	1/16W	5%	RMC1/16S 271JTH	J24189018		1-	A	
R 8103	CHIP RES.	270	1/16W	5%	RMC1/16S 271JTH	J24189018		1-	A	
R 8104	CHIP RES.	270	1/16W	5%	RMC1/16S 271JTH	J24189018		1-	A	
R 8105	CHIP RES.	270	1/16W	5%	RMC1/16S 271JTH	J24189018		1-	A	
R 8106	CHIP RES.	270	1/16W	5%	RMC1/16S 271JTH	J24189018		1-	A	
R 8107	CHIP RES.	270	1/16W	5%	RMC1/16S 271JTH	J24189018		1-	A	
R 8108	CHIP RES.	270	1/16W	5%	RMC1/16S 271JTH	J24189018		1-	A	
S 8101	TACTILE SWITCH				EVQPLHA15	N5090174		1-	A	
S 8102	TACTILE SWITCH				EVQPLHA15	N5090174		1-	A	
S 8103	TACTILE SWITCH				EVQPLHA15	N5090174		1-	A	
S 8104	TACTILE SWITCH				EVQPLHA15	N5090174		1-	A	
S 8105	TACTILE SWITCH				EVQPLHA15	N5090174		1-	A	
S 8106	TACTILE SWITCH				EVQPLHA15	N5090174		1-	A	
S 8107	TACTILE SWITCH				EVQPLHA15	N5090174		1-	A	
S 8108	TACTILE SWITCH				EVQPLHA15	N5090174		1-	A	

Circuit Diagram

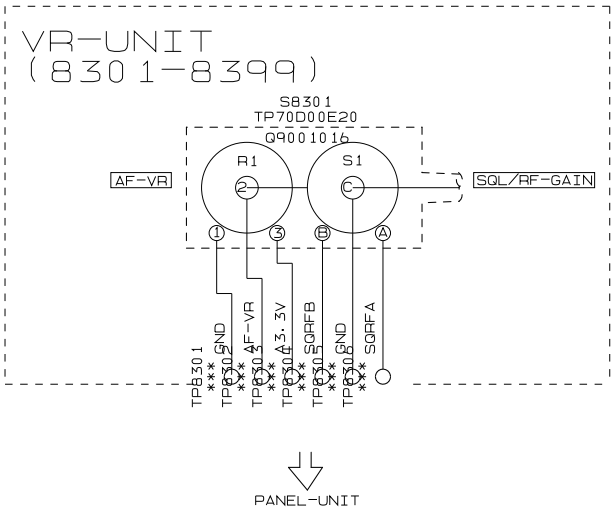

Parts Layout

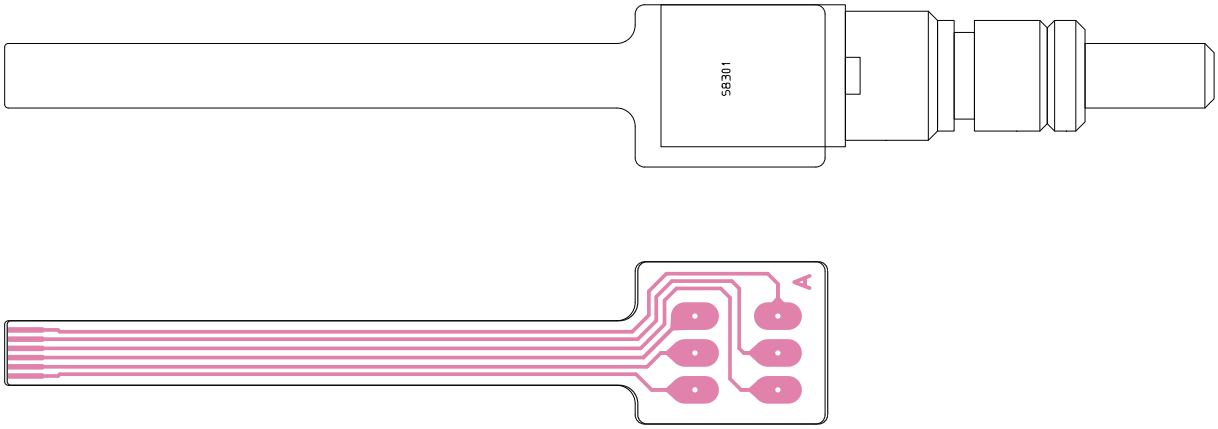

Parts List

REF	DESCRIPTION	VALUE	V/W	TOL.	MFR'S DESIG	YAESU P/N	VERS.	LOT	SIDE	LAY ADR
	PCB with Components					CD0240001				
S 8301	ROTARY ENCODER				TP70D00E20 22F B103	Q9001016		1-		

Copyright 2017
YAESU MUSEN CO., LTD.
All rights reserved.

No portion of this manual may be
reproduced without the permission of
YAESU MUSEN CO., LTD.

YAESU MUSEN CO., LTD.
Tennozu Parkside Building
2-5-8 Higashi-Shinagawa, Shinagawa-ku, Tokyo 140-0002 Japan
YAESU USA
6125 Phyllis Drive, Cypress, CA 90630, U.S.A.
YAESU UK
Unit 12, Sun Valley Business Park, Winnall Close
Winchester, Hampshire, SO23 0LB, U.K.